TRINITY CONSERVATION LLC
EXCAVATION SITE

GREEN HILL ROAD
BARRINGTON, NEW HAMPSHIRE

GENERAL INFORMATION

OWNER
TAX MAP PARCEL NO. 210-44/ 57
TRINITY CONSERVATION LLC
119 FLAGG ROAD
ROCHESTER NH 03839

APPLICANT
TRINITY CONSERVATION LLC
119 FLAGG ROAD
ROCHESTER NH 03839

PREPARED FOR
TRINITY CONSERVATION LLC
119 FLAGG ROAD
ROCHESTER NH 03839

RESOURCE LIST

PLANNING/
ZONING DEPARTMENT
BARRINGTON TOWN HALL
333 CALEF ROAD
BARRINGTON, NH 03825
(603) 664-0195
MARICA GASSES
DIRECTOR OF PLANNING

BUILDING DEPT
BARRINGTON TOWN HALL
333 CALEF ROAD
BARRINGTON, NH 03825
(603) 664-5183
THOMAS ABBOTT
CODE ENFORCEMENT OFFICER

HIGHWAY AND PUBLIC WORKS
HIGHWAY DEPARTMENT
226 SMOKE STREET
BARRINGTON, NH 03835
(603) 664-5379
PETER COOK
ROAD AGENT

POLICE DEPARTMENT
774 FRANKLIN PIERCE HIGHWAY
BARRINGTON, NH 03835
(603) 664-7679
RICHARD P. CONWAY
CHIEF OF POLICE

FIRE DEPARTMENT
774 FRANKLIN PIERCE HIGHWAY
BARRINGTON, NH 03835
(603) 664-2241
RICHARD WALKER
FIRE CHIEF

INDEX OF SHEETS

SHEET	SHEET TITLE
1	COVER SHEET
2	OVERALL SITE PLAN
3	PHASE 1 GRADING PLAN
4-6	ACCESS ROAD PLAN & PROFILE
7	PHASE 2 GRADING PLAN
8	OVERALL GRADING & RECLAMATION PLAN
9	FUTURE DEVELOPMENT PLAN
10-11	CONSTRUCTION DETAIL SHEETS
12	TEMPORARY SEDIMENT BASIN PLAN

PERMITS / APPROVALS

	NUMBER	APPROVED	EXPIRES
NHDES ALT. OF TERRAIN	PENDING		
NHDES WETLANDS IMPACT	PENDING		

VICINITY PLAN

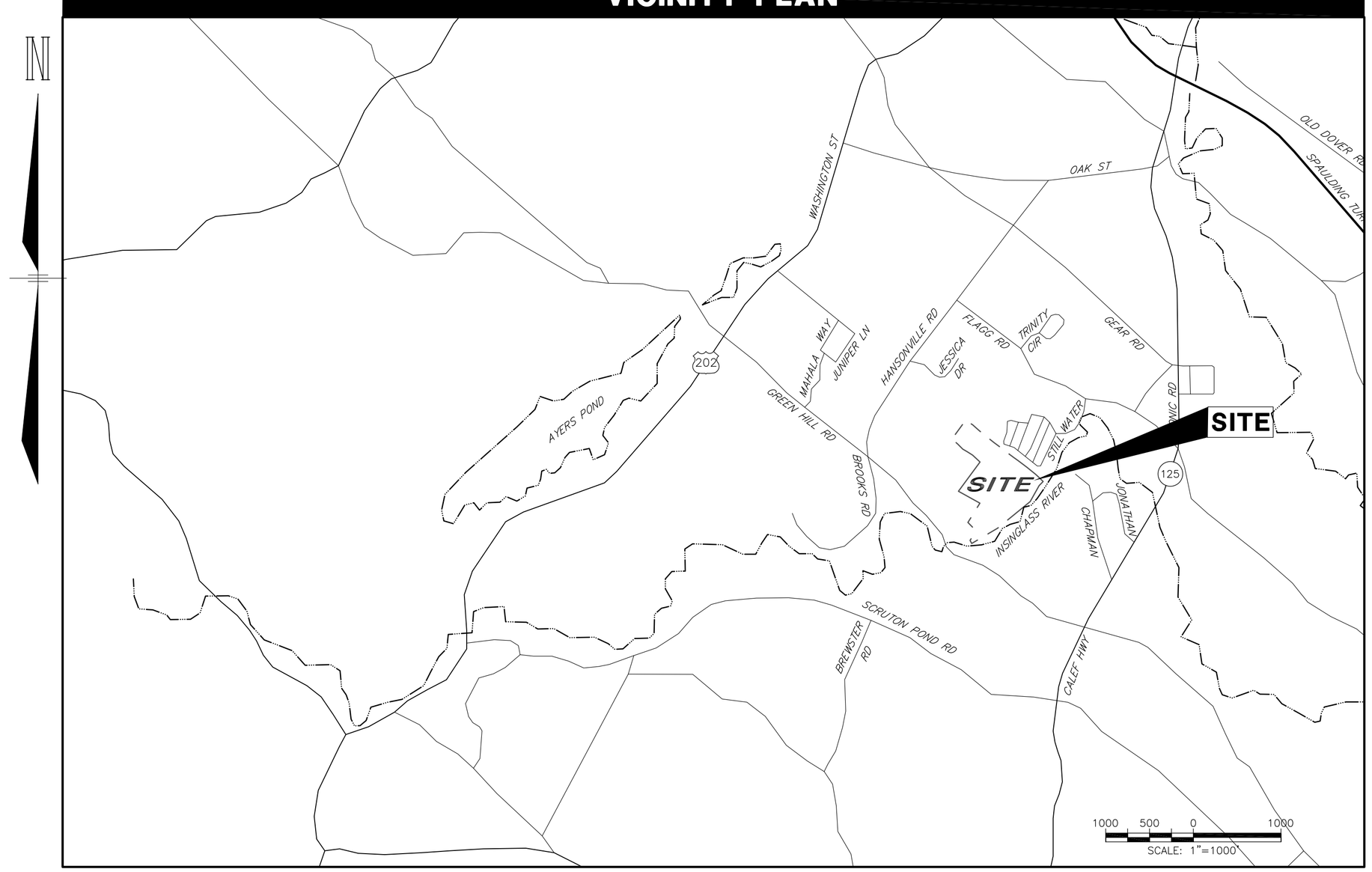

VICINITY PLAN

PROPERTY ABUTTERS LIST

210-42, 210-43, 210-41, 208-39, 208-38
NO LOT ID PER TOWN

219-72
TIMOTHY E. & SUSAN M. ESTES
366 LOS CERRITOS DR.
VALLEJO, CA 94589

219-73
MATTHEW & MICHELLE MAGNUSSON
144 GREEN HILL RD.
BARRINGTON, NH 03825

219-74
PETER & CAROL SCHRIER
138 GREENHILL RD.
BARRINGTON, NH 03825

208-40.1, 208-23
ANN MARIE VITTORIO
104 HANSONVILLE ROAD
BARRINGTON, NH 03825

208-40.2
PETER J. TESSIER
5 HANSONVILLE RD.
GONIC, NH 03839

210-01
WILLIAM LEVESQUE
209 GREENHILL RD.
BARRINGTON, NH 03825

210-2
MARGARETHA VANAALST-BARENDREGT
217 GREENHILL RD.
BARRINGTON, NH 03825

210-3
PROJECT LEASING INC.
PO BOX 381
BARRINGTON, NH 03825

210-4
CELIA BANNENBERG
PO BOX 381
BARRINGTON, NH 03825

210-45
GREGORY & SUSAN HALL
74 HANSONVILLE ROAD
BARRINGTON, NH 03825

210-48
KATHLEEN RYAN
54 HANSONVILLE RD.
BARRINGTON, NH 03825

210-54
LEROY & DEBRAH MYERS
278 GREENHILL RD.
BARRINGTON, NH 03825

210-55
EVE & SAMUEL FAULKNER
232 GREEN HILL RD.
BARRINGTON, NH 03825

210-56
JONATHAN DEWITT
PO BOX 398
BARRINGTON, NH 03825

210-58
EDWARD & JEAN DOTSON
204 GREENHILL RD.
BARRINGTON, NH 03825

210-59
LINDA K. & RUSSELL V. BRACKETT
198 GREEN HILL RD.
BARRINGTON, NH 03825

219-70
GUILIO & NORMA FRANCESCHINI
188 GREEN HILL RD.
BARRINGTON, NH 03825

220-13
ELIZABETH DORAN HEALEY
15 CAHOON WAY
BARRINGTON, NH 03825

259-75
DANA L. SR. & RACHEL J. JOY
116 HANSONVILLE RD.
ROCHESTER, NH 03839-4930

259-74
ROBIN H. SMITH & HARRY E. PROULX
7 JESSICA DR.
ROCHESTER, NH 03839-4940

259-73
MICHAEL & DOROTHY GROULX
15 JESSICA DR.
ROCHESTER, NH 03839-4940

259-45
ROBERT J. & LINDA D. SKIBICKI
122 FLAGG RD.
ROCHESTER, NH 03839-4962

259-44
PHILIP L. & GERALDINE A. PARADIS
REV. TR. TRUSTEES
118 FLAGG RD.
ROCHESTER, NH 03839-4919

261-111
CITY OF ROCHESTER
31 WAKEFIELD ST.
ROCHESTER, NH 03839

261-1
TRINITY CONSERVATION, LLC
119 FLAGG RD.
ROCHESTER, NH 03839

261-3
JOHN F. & LYDIA G.M.CUPP
70 CAHOON WAY
BARRINGTON, NH 03825

261-25
LEO F. & MICHELLE A. BRODEUR
29 SUGAR BROOK ROAD
ROCHESTER, NH 03867

261-24
ELLEN WENTWORTH
31 SUGAR BROOK ROAD
ROCHESTER, NH 03867

261-23
SCOTT CAFASSO & AMANDA WOOLLETT
33 SUGAR BROOK ROAD
ROCHESTER, NH 03867

261-22
DEBORAH L. WORTH & CHRISTOPHER P. BAUGHMAN
51 STILLWATER CIRCLE
ROCHESTER, NH 03869

261-21
ZVODAR FAMILY TRUST
KIMBERLY A. CRAMPSEY, TRUSTEE
29 DIANE MCCAIN DRIVE
BRENTWOOD, NH 03833

261-20
RODERICK J. & DONNA J. GADWAY
55 STILLWATER CIRCLE
ROCHESTER, NH 03869

PROPERTY ABUTTERS LIST (CONTINUED)

261-19
MARGARITA SUE ALVARADO
OFFICE OF PUBLIC GUARDIAN
2 PILLSBURY STREET, SUITE 400
CONCORD, NH 03301

261-18
JEFFREY SCOTT & HEATHER MARIE ROYAL
59 STILLWATER CIRCLE
ROCHESTER, NH 03869

261-17
STEPHEN M. & TONYA B. LEONARD
61 STILLWATER CIRCLE
ROCHESTER, NH 03869

261-16
DWAIN E. & DENISE LOZIER
63 STILLWATER CIRCLE
ROCHESTER, NH 03869

261-15
THOMAS J. & NATHALIE GEARY
65 STILLWATER CIRCLE
ROCHESTER, NH 03869

Copyright 2012 ©Thomas F. Moran, Inc.
48 Constitution Drive, Bedford, N.H. 03110

All rights reserved. These plans and materials may not be copied, duplicated, replicated or otherwise reproduced in any form whatsoever without the prior written permission of Thomas F. Moran, Inc.

This plan is not effective unless signed by a duly authorized officer of Thomas F. Moran, Inc.

TFM®
Civil Engineers
Structural Engineers
Traffic Engineers
Land Surveyors
Landscape Architects
Scientists

REV.	DATE	DESCRIPTION	DR	CK
3	01/17/13	PER DUBOIS & KING REVIEW	JH	JK
1	12/10/12	ADD ABUTTER LIST	JH	JK

SITE PLAN

TAX MAP 210 LOT 57
COVER SHEET
GRAVEL EXCAVATION OPERATION
GREEN HILL ROAD, BARRINGTON, NH
OWNED BY
TRINITY CONSERVATION, LLC
PREPARED FOR
TRINITY CONSERVATION, LLC
SCALE: AS NOTED **SEPTEMBER 20, 2012**

TFM®
Civil Engineers
Structural Engineers
Traffic Engineers
Land Surveyors
Landscape Architects
Scientists
48 Constitution Drive
Bedford, NH 03110
Phone (603) 472-4488
Fax (603) 472-9747
www.tfmoran.com

FILE	DR	FB	
47052.00	JH	–	SHEET 1 OF 12
	CK JK	CADFILE 47052-00 Site.dwg	

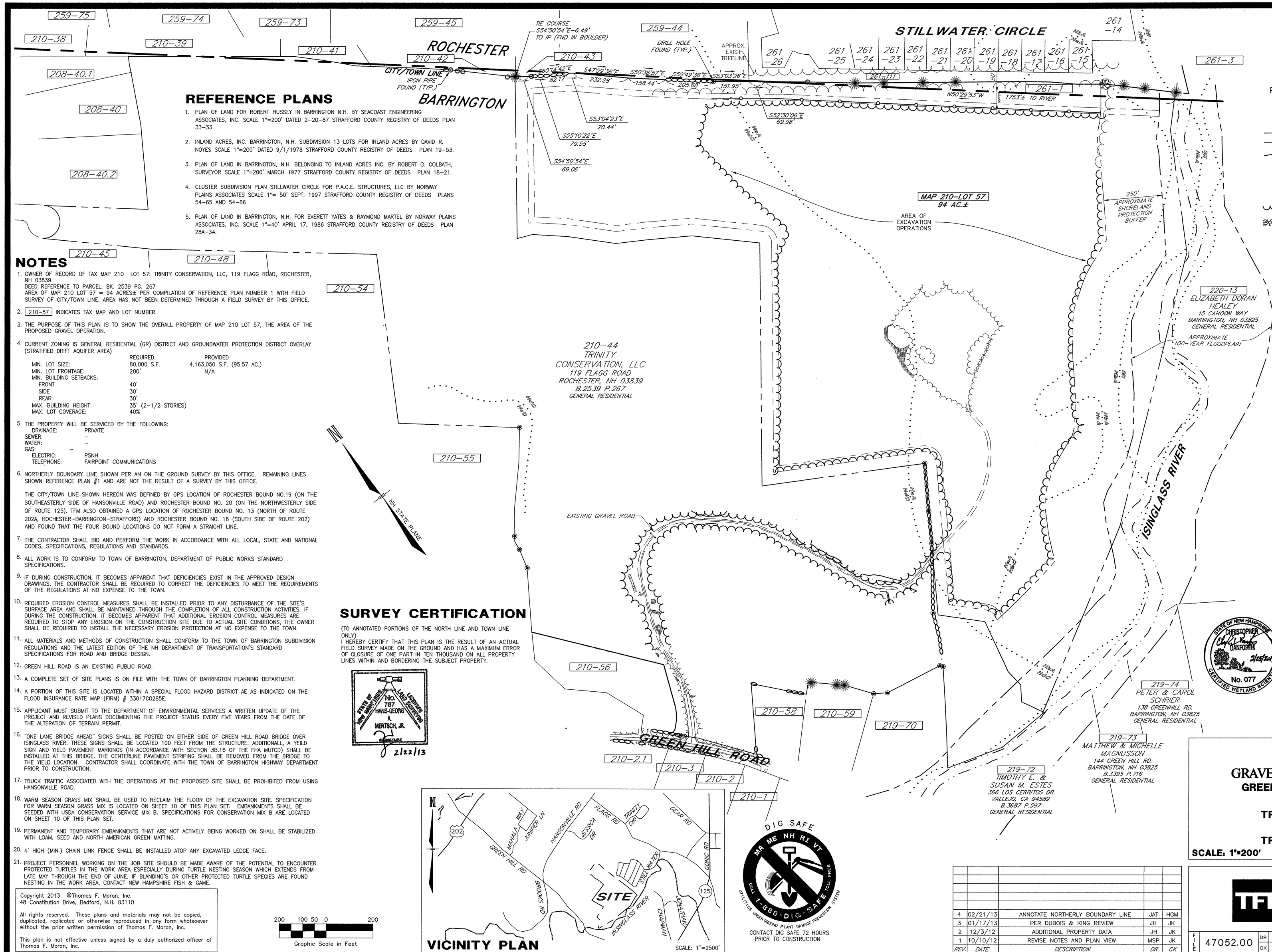

REFERENCE PLANS

1. PLAN OF LAND FOR ROBERT HUSSEY IN BARRINGTON N.H. BY SEACOAST ENGINEERING ASSOCIATES, INC. SCALE 1"=200' DATED 2-20-87 STRAFFORD COUNTY REGISTRY OF DEEDS PLAN 33-33.
2. INLAND ACRES, INC. BARRINGTON, N.H. SUBDIVISION 13 LOTS FOR INLAND ACRES BY DAVID R. NOYES SCALE 1"=200' DATED 9/1/1978 STRAFFORD COUNTY REGISTRY OF DEEDS PLAN 19-53.
3. PLAN OF LAND IN BARRINGTON, N.H. BELONGING TO INLAND ACRES INC. BY ROBERT G. COLBATH, SURVEYOR SCALE 1"=200' MARCH 1977 STRAFFORD COUNTY REGISTRY OF DEEDS PLAN 18-21.
4. CLUSTER SUBDIVISION PLAN STILLWATER CIRCLE FOR P.A.C.E. STRUCTURES, LLC BY NORWAY PLAINS ASSOCIATES SCALE 1"= 50' SEPT. 1997 STRAFFORD COUNTY REGISTRY OF DEEDS PLANS 54-65 AND 54-66
5. PLAN OF LAND IN BARRINGTON, N.H. FOR EVERETT YATES & RAYMOND MARTEL BY NORWAY PLAINS ASSOCIATES, INC. SCALE 1"=40' APRIL 17, 1986 STRAFFORD COUNTY REGISTRY OF DEEDS PLAN 28A-34.

NOTES

1. OWNER OF RECORD OF TAX MAP 210 LOT 57: TRINITY CONSERVATION, LLC, 119 FLAGG ROAD, ROCHESTER, NH 03839
   DEED REFERENCE TO PARCEL: BK. 2539 PG. 267
   AREA OF MAP 210 LOT 57 = 94 ACRES± PER COMPILATION OF REFERENCE PLAN NUMBER 1 WITH FIELD SURVEY OF CITY/TOWN LINE. AREA HAS NOT BEEN DETERMINED THROUGH A FIELD SURVEY BY THIS OFFICE.
2. 210-57 INDICATES TAX MAP AND LOT NUMBER.
3. THE PURPOSE OF THIS PLAN IS TO SHOW THE OVERALL PROPERTY OF MAP 210 LOT 57, THE AREA OF THE PROPOSED GRAVEL OPERATION.
4. CURRENT ZONING IS GENERAL RESIDENTIAL (GR) DISTRICT AND GROUNDWATER PROTECTION DISTRICT OVERLAY (STRATIFIED DRIFT AQUIFER AREA)

	REQUIRED	PROVIDED
MIN. LOT SIZE:	80,000 S.F.	4,163,050 S.F. (95.57 AC.)
MIN. LOT FRONTAGE:	200'	N/A
MIN. BUILDING SETBACKS:		
FRONT	40'	
SIDE	30'	
REAR	30'	
MAX. BUILDING HEIGHT:	35' (2-1/2 STORIES)	
MAX. LOT COVERAGE:	40%	

5. THE PROPERTY WILL BE SERVICED BY THE FOLLOWING:
   DRAINAGE: PRIVATE
   SEWER: –
   WATER: –
   GAS: –
   ELECTRIC: PSNH
   TELEPHONE: FAIRPOINT COMMUNICATIONS
6. NORTHERLY BOUNDARY LINE SHOWN PER AN ON THE GROUND SURVEY BY THIS OFFICE. REMAINING LINES SHOWN REFERENCE PLAN #1 AND ARE NOT THE RESULT OF A SURVEY BY THIS OFFICE.

   THE CITY/TOWN LINE SHOWN HEREON WAS DEFINED BY GPS LOCATION OF ROCHESTER BOUND NO.19 (ON THE SOUTHEASTERLY SIDE OF HANSONVILLE ROAD) AND ROCHESTER BOUND NO. 20 (ON THE NORTHWESTERLY SIDE OF ROUTE 125). TFM ALSO OBTAINED A GPS LOCATION OF ROCHESTER BOUND NO. 13 (NORTH OF ROUTE 202A, ROCHESTER-BARRINGTON-STRAFFORD) AND ROCHESTER BOUND NO. 18 (SOUTH SIDE OF ROUTE 202) AND FOUND THAT THE FOUR BOUND LOCATIONS DO NOT FORM A STRAIGHT LINE.
7. THE CONTRACTOR SHALL BID AND PERFORM THE WORK IN ACCORDANCE WITH ALL LOCAL, STATE AND NATIONAL CODES, SPECIFICATIONS, REGULATIONS AND STANDARDS.
8. ALL WORK IS TO CONFORM TO TOWN OF BARRINGTON, DEPARTMENT OF PUBLIC WORKS STANDARD SPECIFICATIONS.
9. IF DURING CONSTRUCTION, IT BECOMES APPARENT THAT DEFICIENCIES EXIST IN THE APPROVED DESIGN DRAWINGS, THE CONTRACTOR SHALL BE REQUIRED TO CORRECT THE DEFICIENCIES TO MEET THE REQUIREMENTS OF THE REGULATIONS AT NO EXPENSE TO THE TOWN.
10. REQUIRED EROSION CONTROL MEASURES SHALL BE INSTALLED PRIOR TO ANY DISTURBANCE OF THE SITE'S SURFACE AREA AND SHALL BE MAINTAINED THROUGH THE COMPLETION OF ALL CONSTRUCTION ACTIVITIES. IF DURING THE CONSTRUCTION, IT BECOMES APPARENT THAT ADDITIONAL EROSION CONTROL MEASURES ARE REQUIRED TO STOP ANY EROSION ON THE CONSTRUCTION SITE DUE TO ACTUAL SITE CONDITIONS, THE OWNER SHALL BE REQUIRED TO INSTALL THE NECESSARY EROSION PROTECTION AT NO EXPENSE TO THE TOWN.
11. ALL MATERIALS AND METHODS OF CONSTRUCTION SHALL CONFORM TO THE TOWN OF BARRINGTON SUBDIVISION REGULATIONS AND THE LATEST EDITION OF THE NH DEPARTMENT OF TRANSPORTATION'S STANDARD SPECIFICATIONS FOR ROAD AND BRIDGE DESIGN.
12. GREEN HILL ROAD IS AN EXISTING PUBLIC ROAD.
13. A COMPLETE SET OF SITE PLANS IS ON FILE WITH THE TOWN OF BARRINGTON PLANNING DEPARTMENT.
14. A PORTION OF THIS SITE IS LOCATED WITHIN A SPECIAL FLOOD HAZARD DISTRICT AE AS INDICATED ON THE FLOOD INSURANCE RATE MAP (FIRM) # 33017C0285E.
15. APPLICANT MUST SUBMIT TO THE DEPARTMENT OF ENVIRONMENTAL SERVICES A WRITTEN UPDATE OF THE PROJECT AND REVISED PLANS DOCUMENTING THE PROJECT STATUS EVERY FIVE YEARS FROM THE DATE OF THE ALTERATION OF TERRAIN PERMIT.
16. "ONE LANE BRIDGE AHEAD" SIGNS SHALL BE POSTED ON EITHER SIDE OF GREEN HILL ROAD BRIDGE OVER ISINGLASS RIVER. THESE SIGNS SHALL BE LOCATED 100 FEET FROM THE STRUCTURE. ADDITIONALL, A YEILD SIGN AND YIELD PAVEMENT MARKINGS (IN ACCORDANCE WITH SECTION 3B.16 OF THE FHA MUTCD) SHALL BE INSTALLED AT THIS BRIDGE. THE CENTERLINE PAVEMENT STRIPING SHALL BE REMOVED FROM THE BRIDGE TO THE YIELD LOCATION. CONTRACTOR SHALL COORDINATE WITH THE TOWN OF BARRINGTON HIGHWAY DEPARTMENT PRIOR TO CONSTRUCTION.
17. TRUCK TRAFFIC ASSOCIATED WITH THE OPERATIONS AT THE PROPOSED SITE SHALL BE PROHIBITED FROM USING HANSONVILLE ROAD.
18. WARM SEASON GRASS MIX SHALL BE USED TO RECLAIM THE FLOOR OF THE EXCAVATION SITE. SPECIFICATION FOR WARM SEASON GRASS MIX IS LOCATED ON SHEET 10 OF THIS PLAN SET. EMBANKMENTS SHALL BE SEEDED WITH USDA CONSERVATION SERVICE MIX B. SPECIFICATIONS FOR CONSERVATION MIX B ARE LOCATED ON SHEET 10 OF THIS PLAN SET.
19. PERMANENT AND TEMPORARY EMBANKMENTS THAT ARE NOT ACTIVELY BEING WORKED ON SHALL BE STABILIZED WITH LOAM, SEED AND NORTH AMERICAN GREEN MATTING.
20. 4' HIGH (MIN.) CHAIN LINK FENCE SHALL BE INSTALLED ATOP ANY EXCAVATED LEDGE FACE.
21. PROJECT PERSONNEL WORKING ON THE JOB SITE SHOULD BE MADE AWARE OF THE POTENTIAL TO ENCOUNTER PROTECTED TURTLES IN THE WORK AREA ESPECIALLY DURING TURTLE NESTING SEASON WHICH EXTENDS FROM LATE MAY THROUGH THE END OF JUNE. IF BLANDING'S OR OTHER PROTECTED TURTLE SPECIES ARE FOUND NESTING IN THE WORK AREA, CONTACT NEW HAMPSHIRE FISH & GAME.

Copyright 2013 ©Thomas F. Moran, Inc.
48 Constitution Drive, Bedford, N.H. 03110

All rights reserved. These plans and materials may not be copied, duplicated, replicated or otherwise reproduced in any form whatsoever without the prior written permission of Thomas F. Moran, Inc.

This plan is not effective unless signed by a duly authorized officer of Thomas F. Moran, Inc.

200 100 50 0 200
Graphic Scale in Feet

SURVEY CERTIFICATION

(TO ANNOTATED PORTIONS OF THE NORTH LINE AND TOWN LINE ONLY)
I HEREBY CERTIFY THAT THIS PLAN IS THE RESULT OF AN ACTUAL FIELD SURVEY MADE ON THE GROUND AND HAS A MAXIMUM ERROR OF CLOSURE OF ONE PART IN TEN THOUSAND ON ALL PROPERTY LINES WITHIN AND BORDERING THE SUBJECT PROPERTY.

STATE OF NEW HAMPSHIRE
NO. 787
HANS-GEORG A. MERTSCH, JR.
LICENSED LAND SURVEYOR
SIGNATURE
2/22/13

VICINITY PLAN
SCALE: 1"=2500'

DIG SAFE
MA ME NH RI VT
CALL 1-888-DIG-SAFE TOLL FREE
UTILITIES UNDERGROUND PLANT DAMAGE PREVENTION SYSTEM
CONTACT DIG SAFE 72 HOURS PRIOR TO CONSTRUCTION

LEGEND

PROPOSED		EXISTING
	IRON PIPE	IPF
	IRON PIN	IPInF or IRF
	DRILL HOLE	DHF
	EDGE OF PAVEMENT	
	EDGE OF GRAVEL	
	SILT FENCE	
	SIGN	
	UTILITY POLE	
	BROOK, STREAM OR RIVER	
	S.C.S. SOILS BOUNDARY	HdC
	TREELINE	
	RIP-RAP	

NRCS SOILS LEGEND

SOILS INFORMATION SHOWN HEREON IS GRAPHICALLY REPRODUCED FROM THE USDA NATURAL RESOURCES CONSERVATION SERVICE NATIONAL COOPERATIVE SOIL SURVEY OF STRAFFORD COUNTY, NEW HAMPSHIRE, SURVEY AREA DATA, VERSION 10, OCTOBER 27, 2009.

HeA	HINCKLEY, LOAMY SAND, 0-3% SLOPES
HdC	HOLLIS CHARLTON, VERY ROCKY FINE SANDY LOAM, 8-15% SLOPES
HbE	HINCKLEY, GRAVELLY LOAMY SAND, 15-60% SLOPES
MI	MIXED, ALLUVIAL SAND, WET

TRIP DISTRIBUTION:

WE HAVE ASSUMED THAT THE NORMAL OPERATIONAL ACTIVITY WILL GENERATE 10 LOADS PER DAY EACH WITH AN 18 CUBIC YARD LOAD. THE MAXIMUM OUTPUT EXPECTED FROM THE SITE IS 30 LOADS PER DAY (60 TRIP-ENDS).

BASED ON OUR ASSUMPTIONS THE NET AGGREGATE VOLUME TRANSPORTED FROM THE SITE EQUALS 540 CUBIC YARDS PER DAY.

BASED ON INFORMATION FROM TRINITY CONSERVATION LLC, THE PEAK TRAFFIC GENERATED BY THE OPERATION WILL BE 3 LOADS PER HOUR (6 TRIP-ENDS). THIS CORRELATES TO 1 TRIP PER 10 MINUTES DURING THE PEAK HOUR OF THE GENERATOR.

WE HAVE ASSUMED THAT THE TRIPS WILL BE SPLIT BETWEEN THOSE FROM THE EAST (TO NH ROUTE 125) AND THOSE TO THE WEST (TO US ROUTE 202). WE HAVE FURTHER ASSUMED THAT NONE OF THE TRIPS WILL BE ROUTED TO HANSONVILLE ROAD. FOR THIS ANALYSIS WE HAVE DISTRIBUTED THE TRIPS AS 75% TO NH ROUTE 125 AND 25% TO US ROUTE 202.

IN SUMMARY

PEAK HOUR:	6 TRIPS:	4 TRIPS VIA NH ROUTE 125 2 TRIPS VIA US ROUTE 202
AVERAGE DAILY:	60 TRIPS:	45 TRIPS VIA NH ROUTE 125 15 TRIPS VIA US ROUTE 202

WETLAND CERTIFICATION

WETLANDS SHOWN ON THIS PLAN WERE DELINEATED DURING AUGUST OF 2012 BY CHRISTOPHER K. DANFORTH OF TFMORAN, INC. CWS #077. THE WETLANDS WERE DELINEATED ACCORDING TO THE 1987 ARMY CORPS OF ENGINEERS WETLANDS DELINEATION MANUAL AND THE INTERIM REGIONAL SUPPLEMENT NE REGIONAL.

DOMINANT HYDRIC SOIL CONDITIONS WITHIN THE WETLANDS WERE IDENTIFIED UTILIZING THE CRITERIA OF "FIELD INDICATORS FOR IDENTIFYING HYDRIC SOILS IN NEW ENGLAND", VERSION 3, APRIL 2004.

DOMINANCE OF WETLAND VEGETATION WAS ASSESSED UTILIZING THE "NATIONAL LIST OF PLANT SPECIES THAT OCCUR IN WETLANDS: 1988 NORTHEAST" (REGION 1) (PORTER B. REED, JR.) THE AREA SURVEYED FOR WETLANDS INCLUDES LANDS ADACENT TO THE GRAVEL ROAD, THE EXISTING GRAVEL PIT, AND THE LAND BETWEEN THE OPEN AREA AND THE ISINGLASS RIVER. CONTIGUIOUS AND ISOLATED POCKET WETLANDS WERE DELINEATED WITHIN THE 250 FOOT SHORELAND PROTECTION BUFFER TO THE ISINGLASS RIVER THAT ARE NOT DEPICTED HEREON.

STATE OF NEW HAMPSHIRE
CHRISTOPHER K. DANFORTH
2/25/2013
No. 077
CERTIFIED WETLAND SCIENTIST

TAX MAP 210 LOT 57

OVERALL SITE PLAN

GRAVEL EXCAVATION OPERATION

GREEN HILL ROAD, BARRINGTON, NH

OWNED BY

TRINITY CONSERVATION, LLC

PREPARED FOR

TRINITY CONSERVATION, LLC

SCALE: 1"=200' **SEPTEMBER 20, 2012**

REV.	DATE	DESCRIPTION	DR	CK
4	02/21/13	ANNOTATE NORTHERLY BOUNDARY LINE	JAT	HGM
3	01/17/13	PER DUBOIS & KING REVIEW	JH	JK
2	12/3/12	ADDITIONAL PROPERTY DATA	JH	JK
1	10/10/12	REVISE NOTES AND PLAN VIEW	MSP	JK

TFM®
Civil Engineers
Structural Engineers
Traffic Engineers
Land Surveyors
Landscape Architects
Scientists

48 Constitution Drive
Bedford, NH 03110
Phone (603) 472-4488
Fax (603) 472-9747
www.tfmoran.com

FILE	DR	FB	–	
47052.00	JH			SHEET 2 OF 12
	CK JK	CADFILE	47052-00 Site	

OPERATION & MAINTENANCE NOTES:

1. THE OPERATION IS PROPOSED TO BE RUN YEAR-ROUND, EXCLUDING MAJOR HOLIDAYS AND AS OTHERWISE INDICATED IN THIS LETTER. NORMAL BUSINESS HOURS ARE PROPOSED TO BE MONDAY THROUGH FRIDAY FROM 8:00AM TO 5:00 PM, WHERE THE BUSINESS WILL BE OPEN TO THE PUBLIC. ROUTINE MAINTENANCE MAY BE PERFORMED ON THE GROUNDS ON SATURDAY FROM 8:00 AM TO 5:00 PM; HOWEVER THE BUSINESS WILL BE CLOSED TO THE PUBLIC ON SATURDAY. ROUTINE MAINTENANCE SHALL CONSIST OF CLEANING EQUIPMENT, RECLAMATION, INSPECTION AND MAINTENANCE OF STORM WATER TREATMENT AND CONVEYANCE PRACTICES, MAINTENANCE OF THE ACCESS ROADWAY AND RELATED ACTIVITIES.
2. BLASTING IS LIMITED TO ONE DAY PER TWO MONTHS. OPERATOR IS REQUIRED TO PROVIDE 48 HOURS NOTICE TO ABUTTERS IN ADVANCE OF BLASTING OPERATIONS.
3. THE USE OF ACOUSTICAL WALLS SHALL BE IMPLEMENTED DURING ANY CRUSHING. SOUND LEVELS SHALL BE RECORDED AT ALL PROPERTY LINES DURING CRUSHING. CRUSHING SHALL TEMPORARILY CEASE AND DESIST IF SOUND LEVELS EXCEED 75 DECIBELS AT THE PROPERTY LINE UNTIL ADDITIONAL SOUND MITIGATION PRACTICES ARE EMPLOYED.
4. BLASTING SHALL CONFORM TO THE NH DEPARTMENT OF SAFETY RULES ESTABLISHED PER SAF-C 1600. THE BLASTING CONTRACTOR WILL MONITOR GROUND VIBRATIONS PRODUCED BY EACH BLAST AND WILL PRODUCE PRINTED SEISMOGRAMS OF VIBRATIONS THAT ARE RECORDED IN UNITS OF PARTICLE VELOCITY IN INCHES/SECONDS. THESE PRINTED MEASUREMENTS WILL BE RETAINED BY THE BLASTING CONTRACTOR FOR A PERIOD OF AT LEAST SIX MONTHS AND WILL BE MADE AVAILABLE TO THE TOWN AND STATE OFFICIALS UPON REQUEST.
5. DUST CONTROL WILL BE IMPLEMENTED AS NEEDED ONCE SITE GRADING HAS BEGUN AND DURING WINDY CONDITIONS (FORECASTED OR ACTUAL WIND CONDITIONS OF 20 MPH OR GREATER) WHILE SITE GRADING IS OCCURRING. SPRAYING OF POTABLE WATER AT A RATE OF 300 GALLONS PER ACRE OR LESS WILL BE PERFORMED BY A MOBILE PRESSURE-TYPE DISTRIBUTOR TRUCK NO MORE THAN THREE TIMES A DAY DURING THE MONTHS OF MAY THRU SEPTEMBER AND ONCE PER DAY DURING THE MONTHS OF OCTOBER THRU APRIL OR WHENEVER THE DRYNESS OF THE SOIL WARRANTS IT.
6. OPERATOR SHALL FOLLOW INSTALLATION AND MAINTENANCE SCHEDULE DETAILED IN THE STORMWATER POLLUTION PREVENTION PLAN (SWPPP) DURING EXCAVATION ACTIVITIES, AND SHALL PREPARE AND POSSESS ON SITE AN OPERATIONS PLAN INCLUDING BUT NOT LIMITED SPILL PREVENTION, CONTROL AND COUNTERMEASURES TO CONTROL THE USE AND STORAGE OF REGULATED SUBSTANCES.
COPIES OF THE SWPPP INSPECTION AND MAINTENANCE LOGS SHALL BE KEPT ONSITE AT ALL TIMES. THESE LOGS SHALL BE REGULARLY SUBMITTED TO THE ISINGLASS RIVER LOCAL ADVISORY COMMITTEE.

BLASTING BMP's

1) IDENTIFY DRINKING WATER WELLS LOCATED WITHIN 2000 FEET OF THE PROPOSED BLASTING ACTIVITIES. DEVELOP A GROUNDWATER QUALITY SAMPLING PROGRAM TO MONITOR FOR NITRATE AND NITRITE EITHER IN THE DRINKING WATER SUPPLY WELLS OR IN OTHER WELLS THAT ARE REPRESENTATIVE OF THE DRINKING WATER SUPPLY WELLS IN THE AREA. THE PLAN MUST INCLUDE PRE AND POST BLAST WATER QUALITY MONITORING AND BE APPROVED BY NHDES PRIOR TO INITIATING BLASTING. THE GROUNDWATER SAMPLING PROGRAM MUST BE IMPLEMENTED ONCE APPROVED BY NHDES.
2) THE FOLLOWING BEST MANAGEMENT PROCEDURES FOR BLASTING SHALL BE COMPLIED WITH:
(1) LOADING PRACTICES. THE FOLLOWING BLASTHOLE LOADING PRACTICES TO MINIMIZE ENVIRONMENTAL EFFECTS SHALL BE FOLLOWED:
(A) DRILLING LOGS SHALL BE MAINTAINED BY THE DRILLER AND COMMUNICATED DIRECTLY TO THE BLASTER. THE LOGS SHALL INDICATE DEPTHS AND LENGTHS OF VOIDS, CAVITIES, AND FAULT ZONES OR OTHER WEAK ZONES ENCOUNTERED AS WELL AS GROUNDWATER CONDITIONS.
(B) EXPLOSIVE PRODUCTS SHALL BE MANAGED ON-SITE SO THAT THEY ARE EITHER USED IN THE BOREHOLE, RETURNED TO THE DELIVERY VEHICLE, OR PLACED IN SECURE CONTAINERS FOR OFF-SITE DISPOSAL.
(C) SPILLAGE AROUND THE BOREHOLE SHALL EITHER BE PLACED IN THE BOREHOLE OR CLEANED UP AND RETURNED TO AN APPROPRIATE VEHICLE FOR HANDLING OR PLACEMENT IN SECURED CONTAINERS FOR OFF-SITE DISPOSAL.
(D) LOADED EXPLOSIVES SHALL BE DETONATED AS SOON AS POSSIBLE AND SHALL NOT BE LEFT IN THE BLASTHOLES OVERNIGHT, UNLESS WEATHER OR OTHER SAFETY CONCERNS REASONABLY DICTATE THAT DETONATION SHOULD BE POSTPONED.
(E) LOADING EQUIPMENT SHALL BE CLEANED IN AN AREA WHERE WASTEWATER CAN BE PROPERLY CONTAINED AND HANDLED IN A MANNER THAT PREVENTS RELEASE OF CONTAMINANTS TO THE ENVIRONMENT.
(F) EXPLOSIVES SHALL BE LOADED TO MAINTAIN GOOD CONTINUITY IN THE COLUMN LOAD TO PROMOTE COMPLETE DETONATION. INDUSTRY ACCEPTED LOADING PRACTICES FOR PRIMING, STEMMING, DECKING AND COLUMN RISE NEED TO BE ATTENDED TO.
(2) EXPLOSIVE SELECTION. THE FOLLOWING BMPS SHALL BE FOLLOWED TO REDUCE THE POTENTIAL FOR GROUNDWATER CONTAMINATION WHEN EXPLOSIVES ARE USED:
(A) EXPLOSIVE PRODUCTS SHALL BE SELECTED THAT ARE APPROPRIATE FOR SITE CONDITIONS AND SAFE BLAST EXECUTION.
(B) EXPLOSIVE PRODUCTS SHALL BE SELECTED THAT HAVE THE APPROPRIATE WATER RESISTANCE FOR THE SITE CONDITIONS PRESENT TO MINIMIZE THE POTENTIAL FOR HAZARDOUS EFFECT OF THE PRODUCT UPON GROUNDWATER.
(3) PREVENTION OF MISFIRES. APPROPRIATE PRACTICES SHALL BE DEVELOPED AND IMPLEMENTED TO PREVENT MISFIRES.
(4) MUCK PILE MANAGEMENT. MUCK PILES (THE BLASTED PIECES OF ROCK) AND ROCK PILES SHALL BE MANAGED IN A MANNER TO REDUCE THE POTENTIAL FOR CONTAMINATION BY IMPLEMENTING THE FOLLOWING MEASURES:
(A) REMOVE THE MUCK PILE FROM THE BLAST AREA AS SOON AS REASONABLY POSSIBLE.
(B) MANAGE THE INTERACTION OF BLASTED ROCK PILES AND STORMWATER TO PREVENT CONTAMINATION OF WATER SUPPLY WELLS OR SURFACE WATER.
(5) SPILL PREVENTION MEASURES AND SPILL MITIGATION. SPILL PREVENTION AND SPILL MITIGATION MEASURES SHALL BE IMPLEMENTED TO PREVENT THE RELEASE OF FUEL AND OTHER RELATED SUBSTANCES TO THE ENVIRONMENT. THE MEASURES SHALL INCLUDE AT A MINIMUM:
(A) THE FUEL STORAGE REQUIREMENTS SHALL INCLUDE:
1. STORAGE OF REGULATED SUBSTANCES ON AN IMPERVIOUS SURFACE;
2. SECURE STORAGE AREAS AGAINST UNAUTHORIZED ENTRY;
3. LABEL REGULATED CONTAINERS CLEARLY AND VISIBLY;
4. INSPECT STORAGE AREAS WEEKLY;
5. COVER REGULATED CONTAINERS IN OUTSIDE STORAGE AREAS;
6. WHEREVER POSSIBLE, KEEP REGULATED CONTAINERS THAT ARE STORED OUTSIDE MORE THAN 50 FEET FROM SURFACE WATER AND STORM DRAINS, 75 FEET FROM PRIVATE WELLS, AND 400 FEET FROM PUBLIC WELLS; AND
7. SECONDARY CONTAINMENT IS REQUIRED FOR CONTAINERS CONTAINING REGULATED SUBSTANCES STORED OUTSIDE, EXCEPT FOR ON PREMISE USE HEATING FUEL TANKS, OR ABOVEGROUND OR UNDERGROUND STORAGE TANKS OTHERWISE REGULATED.
(B) THE FUEL HANDLING REQUIREMENTS SHALL INCLUDE:
1. EXCEPT WHEN IN USE, KEEP CONTAINERS CONTAINING REGULATED SUBSTANCES CLOSED AND SEALED;
2. PLACE DRIP PANS UNDER SPIGOTS, VALVES, AND PUMPS;
3. HAVE SPILL CONTROL AND CONTAINMENT EQUIPMENT READILY AVAILABLE IN ALL WORK AREAS;
4. USE FUNNELS AND DRIP PANS WHEN TRANSFERRING REGULATED SUBSTANCES; AND
5. PERFORM TRANSFERS OF REGULATED SUBSTANCES OVER AN IMPERVIOUS SURFACE.
(C) THE TRAINING OF ON-SITE EMPLOYEES AND THE ON-SITE POSTING OF RELEASE RESPONSE INFORMATION DESCRIBING WHAT TO DO IN THE EVENT OF A SPILL OF REGULATED SUBSTANCES.
(D) FUELING AND MAINTENANCE OF EXCAVATION, EARTHMOVING AND OTHER CONSTRUCTION RELATED EQUIPMENT WILL COMPLY WITH THE REGULATIONS OF THE NEW HAMPSHIRE DEPARTMENT OF ENVIRONMENTAL SERVICES [NOTE THESE REQUIREMENTS ARE SUMMARIZED IN WD-DWGB-22-6 BEST MANAGEMENT PRACTICES FOR FUELING AND MAINTENANCE OF EXCAVATION AND EARTHMOVING EQUIPMENT" OR ITS SUCCESSOR DOCUMENT. (SEE HTTP://DES.NH.GOV/ORGANIZATION/COMMISSIONER/PIP/FACTSHEETS/DWGB/DOCUMENTS/DWGB-22-6.PDF)

PHASING NOTE

THE GRAVEL EXCAVATION OPERATION WILL BE PERFORMED SO AS TO ONLY DISTURB 10 ACRES AT A TIME. THE AREA COMPLETED WILL BE STABILIZED WITH GRASS PRIOR TO CLEARING, GRUBBING AND EXCAVATING THE NEXT PHASE AREA. AREAS SHOWN ARE AN EXAMPLE OF POSSIBLE PHASING, BUT THE OPERATOR MAY VARY PHASING SEQUENCE (WHILE ONLY DISTURBING 10 ACRES AT ANY GIVEN TIME).

THE OPERATOR SHALL UPGRADE THE ENTRANCE DRIVEWAY AS SHOWN PRIOR TO BEGINNING THE GRAVEL EXCAVATION OPERATION, THEN BEGIN THE OPERATION IN THE EXISTING OPEN AREA (PHASE 1). A SEDIMENTATION BASIN OR OTHER DRAINAGE SYSTEM SHALL BE PROVIDED TO TREAT RUNOFF PRIOR TO LEAVING THE PROJECT AREA.

Copyright 2012 ©Thomas F. Moran, Inc.
48 Constitution Drive, Bedford, N.H. 03110

All rights reserved. These plans and materials may not be copied, duplicated, replicated or otherwise reproduced in any form whatsoever without the prior written permission of Thomas F. Moran, Inc.

This plan is not effective unless signed by a duly authorized officer of Thomas F. Moran, Inc.

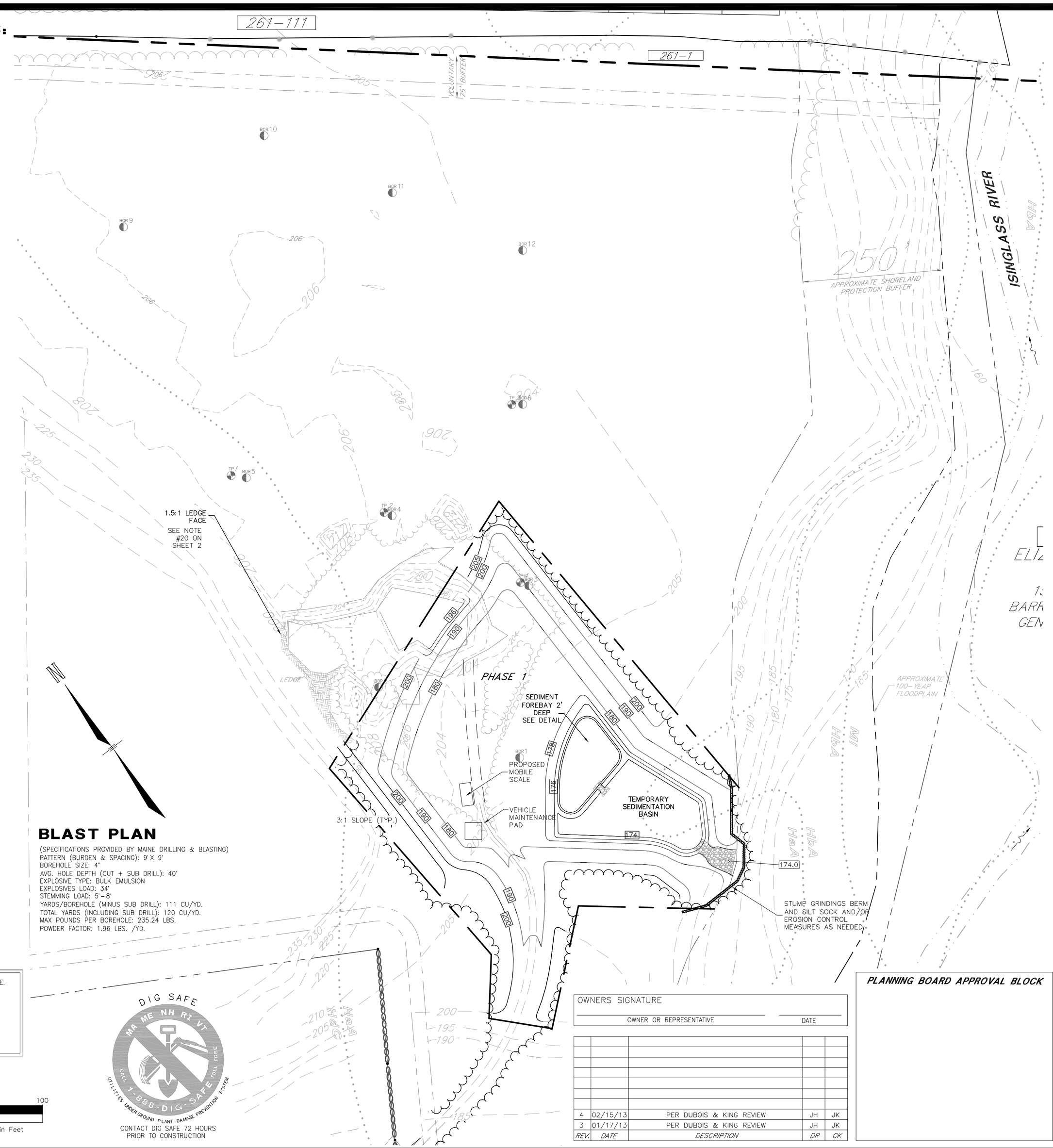

BLAST PLAN

(SPECIFICATIONS PROVIDED BY MAINE DRILLING & BLASTING)
PATTERN (BURDEN & SPACING): 9' X 9'
BOREHOLE SIZE: 4"
AVG. HOLE DEPTH (CUT + SUB DRILL): 40'
EXPLOSIVE TYPE: BULK EMULSION
EXPLOSIVES LOAD: 34'
STEMMING LOAD: 5'-8'
YARDS/BOREHOLE (MINUS SUB DRILL): 111 CU/YD.
TOTAL YARDS (INCLUDING SUB DRILL): 120 CU/YD.
MAX POUNDS PER BOREHOLE: 235.24 LBS.
POWDER FACTOR: 1.96 LBS. /YD.

DIG SAFE
MA ME NH RI VT
CALL 1-888-DIG-SAFE TOLL FREE
UTILITIES UNDER GROUND PLANT DAMAGE PREVENTION SYSTEM
CONTACT DIG SAFE 72 HOURS PRIOR TO CONSTRUCTION

100 50 25 0 100
Graphic Scale in Feet

OWNERS SIGNATURE

OWNER OR REPRESENTATIVE DATE

REV.	DATE	DESCRIPTION	DR	CK
4	02/15/13	PER DUBOIS & KING REVIEW	JH	JK
3	01/17/13	PER DUBOIS & KING REVIEW	JH	JK

PLANNING BOARD APPROVAL BLOCK

NOTES

1. THE PURPOSE OF THIS PLAN IS TO SHOW PHASE1 (10 AC.) EXCAVATION OF THE SITE.
2. TOPOGRAPHY SHOWN IS A COMPILATION OF GROUND SURVEY BY THIS OFFICE AND INFORMATION TAKEN FROM THE REFERENCE PLAN. GROUND SURVEY DATUM IS NAD 88 COORS.
3. WRITTEN DIMENSIONS HAVE PRECEDENCE OVER SCALED DIMENSIONS. THE CONTRACTOR SHALL USE CAUTION WHEN SCALING REPRODUCED PLANS. IN CASE OF CONFLICT BETWEEN THIS PLAN SET AND ANY OTHER DRAWING AND/OR SPECIFICATION, THE ENGINEER SHALL BE NOTIFIED IMMEDIATELY FOR CLARIFICATIONS.
4. THE CONTRACTOR IS RESPONSIBLE FOR THE MEANS AND METHODS OF CONSTRUCTION AND FOR CONDITIONS AT THE SITE. THESE PLANS, PREPARED BY TFMORAN, INC., DO NOT EXTEND TO OR INCLUDE SYSTEMS PERTAINING TO THE SAFETY OF THE CONSTRUCTION CONTRACTOR OR THEIR EMPLOYEES, AGENTS OR REPRESENTATIVES IN THE PERFORMANCE OF THE WORK. THE SEAL OF THE SURVEYOR OR ENGINEER HEREON DOES NOT EXTEND TO ANY SUCH SAFETY SYSTEMS THAT MAY NOW OR HEREAFTER BE INCORPORATED INTO THESE PLANS. THE CONSTRUCTION CONTRACTOR SHALL PREPARE OR OBTAIN THE APPROPRIATE SAFETY SYSTEMS WHICH MAY BE REQUIRED BY THE U.S. OCCUPATIONAL SAFETY AND HEALTH ADMINISTRATION (OSHA) AND/OR LOCAL REGULATIONS.
5. IT SHALL BE THE CONTRACTOR'S RESPONSIBILITY TO FAMILIARIZE HIMSELF WITH THE SITE AND ALL EXISTING CONDITIONS SURROUNDING IT AND THEREON. THE CONTRACTOR SHALL ADVISE THE APPROPRIATE AUTHORITY OF HIS INTENTIONS AT LEAST 48 HOURS IN ADVANCE.
6. THE CONTRACTOR SHALL MAINTAIN EMERGENCY ACCESS TO ALL AREAS AFFECTED BY HIS WORK AT ALL TIMES.
7. IN THE EVENT OF A CONFLICT BETWEEN PLANS, SPECIFICATIONS, AND DETAILS, THE ENGINEER SHALL BE NOTIFIED IMMEDIATELY FOR CLARIFICATION.
8. IF CONDITIONS AT THE SITE ARE DIFFERENT THAN SHOWN ON THE PLANS, THE ENGINEER SHALL BE NOTIFIED PRIOR TO PROCEEDING WITH THE AFFECTED WORK.
9. THESE PLANS WERE PREPARED UNDER THE SUPERVISION OF A LICENSED PROFESSIONAL ENGINEER. TFMORAN INC. ASSUMES NO LIABILITY AS A RESULT OF ANY CHANGES OR NON-CONFORMANCE WITH THESE PLANS EXCEPT UPON THE WRITTEN APPROVAL OF THE ENGINEER OF RECORD.
10. TFMORAN INC. ASSUMES NO LIABILITY FOR WORK PERFORMED WITHOUT AN ACCEPTABLE PROGRAM OF TESTING AND INSPECTION AS APPROVED BY THE ENGINEER OF RECORD.
11. WARM SEASON GRASS MIX SHALL BE USED TO RECLAIM THE FLOOR OF THE EXCAVATION SITE. SPECIFICATION FOR WARM SEASON GRASS MIX IS LOCATED ON SHEET 10 OF THIS PLAN SET. EMBANKMENTS SHALL BE SEEDED WITH USDA CONSERVATION SERVICE MIX B. SPECIFICATIONS FOR CONSERVATION MIX B ARE LOCATED ON SHEET 10 OF THIS PLAN SET.
12. PERMANENT AND TEMPORARY EMBANKMENTS THAT ARE NOT ACTIVELY BEING WORKED ON SHALL BE STABILIZED WITH LOAM, SEED AND NORTH AMERICAN GREEN MATTING.
13. OPERATOR/EXCAVATOR SHALL OBSERVE WATER LEVEL IN MONITORING WELLS DURING APRIL ANNUALLY. FINAL GRADES SHALL BE AJUSTED AS NECESSARY TO PROVIDE 4 FEET (MIN.) SEPARATION ABOVE WATER TABLE.
14. WHERE LEDGE IS ENCOUNTERED AT DESIGN FINISH GRADE OPERATOR SHALL OVERBLAST AND BACKFILL TO DEISGN FINISH GRADES USING OVERBURDEN AND/OR OTHER MATERIAL DETERMINED BY ENGINEER.

LEGEND

PROPOSED		EXISTING
	IRON PIPE	IPF
	IRON PIN	IPinF or IRF
	DRILL HOLE	DHF
	SILT SOCK/STUMP GRINDINGS BERM	
	SIGN	
	UTILITY POLE	
	TESTPIT	TP
200	INDEX CONTOUR	200
202	INTERMEDIATE CONTOUR	202
	BROOK, STREAM OR RIVER	
	S.C.S. SOILS BOUNDARY	HdC
	TREELINE	
	RIP-RAP	

WETLAND CERTIFICATION

WETLANDS SHOWN ON THIS PLAN WERE DELINEATED DURING AUGUST OF 2012 BY CHRISTOPHER K. DANFORTH OF TFMORAN, INC. CWS #077. THE WETLANDS WERE DELINEATED ACCORDING TO THE 1987 ARMY CORPS OF ENGINEERS WETLANDS DELINEATION MANUAL AND THE INTERIM REGIONAL SUPPLEMENT NE REGIONAL.

DOMINANT HYDRIC SOIL CONDITIONS WITHIN THE WETLANDS WERE IDENTIFIED UTILIZING THE CRITERIA OF "FIELD INDICATORS FOR IDENTIFYING HYDRIC SOILS IN NEW ENGLAND", VERSION 3, APRIL 2004.

DOMINANCE OF WETLAND VEGETATION WAS ASSESSED UTILIZING THE "NATIONAL LIST OF PLANT SPECIES THAT OCCUR IN WETLANDS: 1988 NORTHEAST" (REGION 1) (PORTER B. REED, JR.) THE AREA SURVEYED FOR WETLANDS INCLUDES LANDS ADACENT TO THE GRAVEL ROAD, THE EXISTING GRAVEL PIT, AND THE LAND BETWEEN THE OPEN AREA AND THE ISINGLASS RIVER. CONTIGUOUS AND ISOLATED POCKET WETLANDS WERE DELINEATED WITHIN THE 250 FOOT SHORELAND PROTECTION BUFFER TO THE ISINGLASS RIVER THAT ARE NOT DEPICTED HEREON.

NH DITT

TAX MAP 210 LOT 57

PHASE 1 GRADING PLAN

GRAVEL EXCAVATION OPERATION

GREEN HILL ROAD, BARRINGTON, NH

OWNED BY

TRINITY CONSERVATION, LLC

PREPARED FOR

TRINITY CONSERVATION, LLC

SCALE: 1"=100' **SEPTEMBER 20, 2012**

TFM®
Civil Engineers
Structural Engineers
Traffic Engineers
Land Surveyors
Landscape Architects
Scientists

48 Constitution Drive
Bedford, NH 03110
Phone (603) 472-4488
Fax (603) 472-9747
www.tfmoran.com

FILE	47052.00	DR	JH	FB	-	SHEET 3 OF 12
		CK	JK	CADFILE	47052-00 Site	

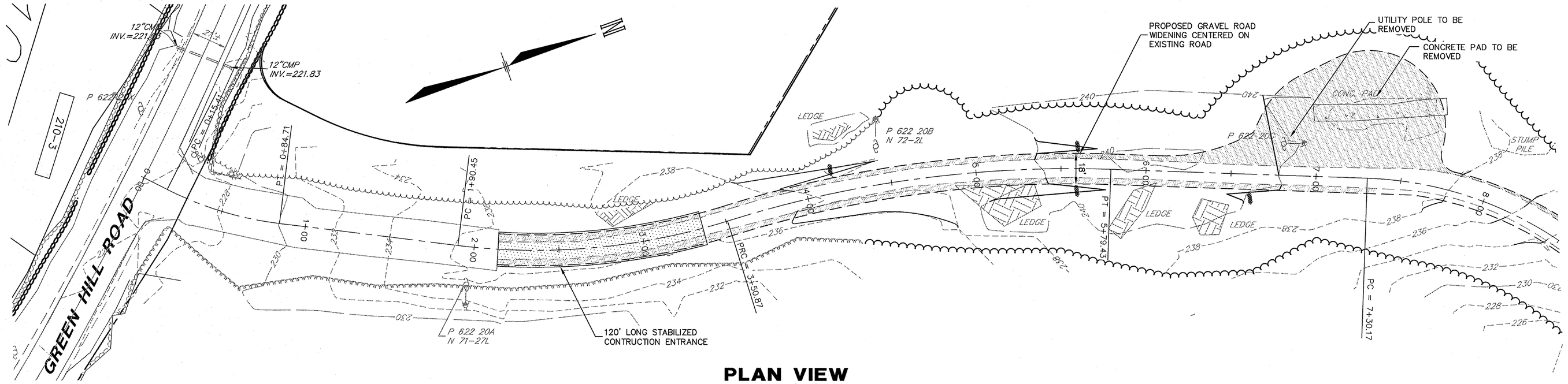

PLAN VIEW

SCALE: 1"=40'

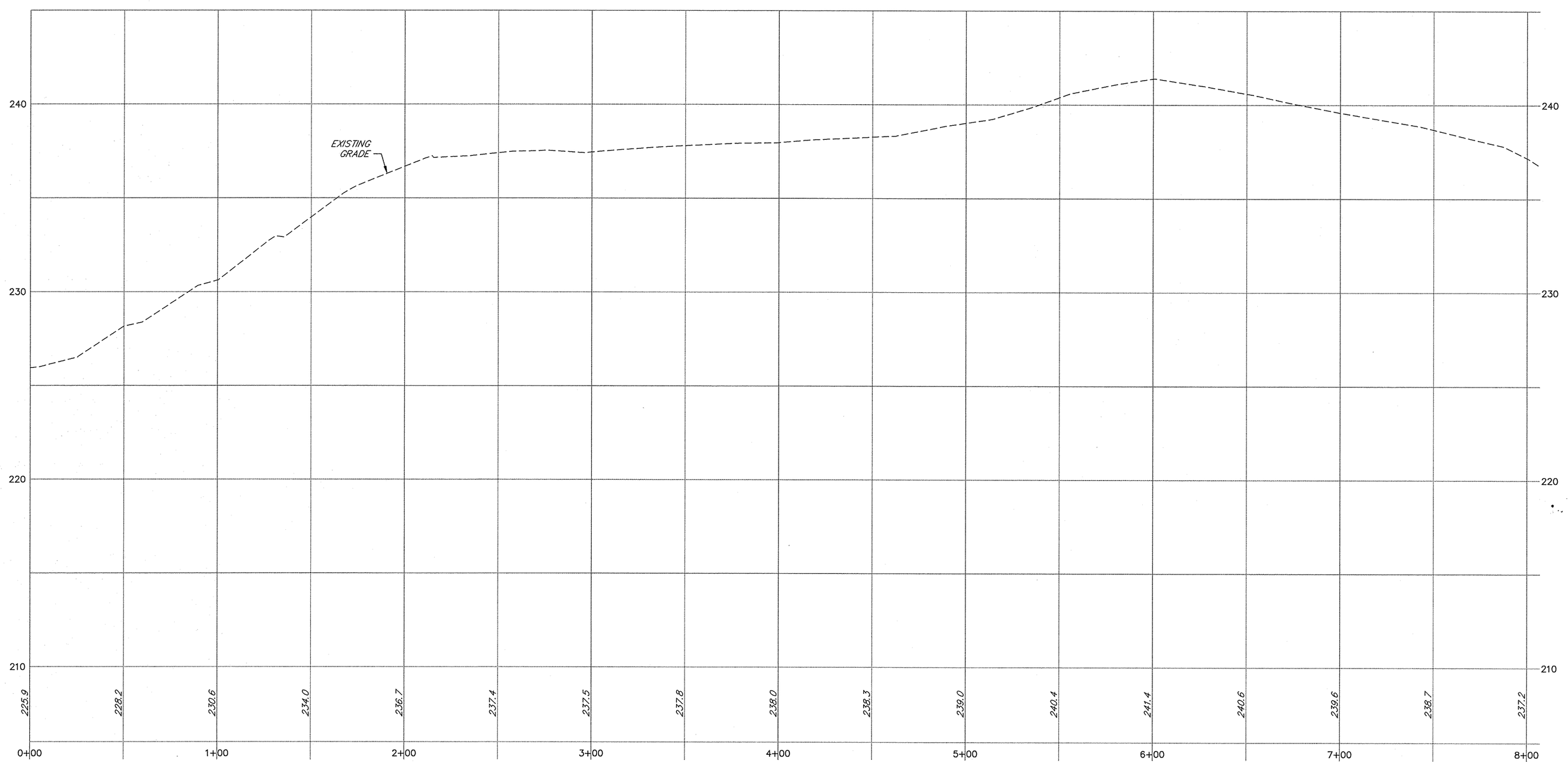

PROFILE

SCALE: 1"=40' HORIZ.
1"=4' VERT.

NOTES

1. ALL WORK SHALL CONFORM TO THE APPLICABLE REGULATIONS AND STANDARDS OF THE TOWN OF BARRINGTON, AND SHALL BE BUILT IN A WORKMANLIKE MANNER IN ACCORDANCE WITH THE PLANS AND SPECIFICATIONS.
2. IT SHALL BE THE CONTRACTOR'S RESPONSIBILITY TO FAMILIARIZE HIMSELF WITH THE SITE AND ALL EXISTING CONDITIONS SURROUNDING IT AND THEREON.
3. THE CONTRACTOR SHALL BE RESPONSIBLE FOR VERIFYING AND DETERMINING THE LOCATION, SIZE AND ELEVATION OF ALL EXISTING UTILITIES, SHOWN OR NOT SHOWN ON THESE PLANS, PRIOR TO THE START OF ANY CONSTRUCTION. THE ENGINEER SHALL BE NOTIFIED IN WRITING OF ANY UTILITIES FOUND INTERFERING WITH THE PROPOSED CONSTRUCTION AND APPROPRIATE REMEDIAL ACTION BE AGREED TO BY THE ENGINEER BEFORE PROCEEDING WITH THE WORK. THE CONTRACTOR SHALL BE RESPONSIBLE TO CONTACT "DIGSAFE" (888-344-7233) AT LEAST 72 HOURS BEFORE DIGGING.
4. THE CONTRACTOR SHALL CONTACT ALL UTILITY COMPANIES OWNING UTILITIES, EITHER OVERHEAD OR UNDERGROUND, WITHIN THE CONSTRUCTION AREA AND SHALL COORDINATE AS NECESSARY WITH THE UTILITY COMPANIES OF SAID UTILITIES. THE PROTECTION OR RELOCATION OF UTILITIES IS ULTIMATELY THE RESPONSIBILITY OF THE CONTRACTOR.
5. ROAD AND DRAINAGE CONSTRUCTION SHALL CONFORM TO THE TYPICAL SECTIONS AND DETAILS SHOWN ON THE PLANS, AND SHALL MEET LOCAL STANDARDS AND THE REQUIREMENTS OF THE LATEST NHDOT STANDARD SPECIFICATIONS FOR ROADS AND BRIDGE CONSTRUCTION AND THE N.H.D.O.T. STANDARD STRUCTURE DRAWINGS UNLESS OTHERWISE NOTED.
6. STORM DRAINAGE SYSTEM SHALL BE CONSTRUCTED TO LINE AND GRADE AS SHOWN ON THE PLANS. ALL PIPE MATERIAL SHALL BE REINFORCED CONCRETE AND CONFORM TO AASHTO M170 CLASS IV REINFORCED CONCRETE PIPE. CONSTRUCTION METHODS SHALL CONFORM TO N.H.D.O.T. STANDARD SPECIFICATIONS, SECTION 603. CATCH BASINS AND DRAIN MANHOLES SHALL CONFORM TO SECTION 604. ALL CATCH BASIN GRATES SHALL BE TYPE B AND CONFORM TO N.H.D.O.T. STANDARDS AND SPECIFICATIONS UNLESS OTHERWISE NOTED.
7. AASHTO M170 CLASS IV RCP SHALL BE USED UNDER ANY PAVED AREAS. WHERE DEPTH OF COVER IS LESS THAN 3 FEET, CLASS V REINFORCED CONCRETE PIPE SHALL BE USED.
8. THE CONTRACTOR SHALL BE RESPONSIBLE FOR INSTALLING AND MAINTAINING ALL EROSION AND SEDIMENT CONTROL DEVICES NECESSARY TO CONTROL EROSION THROUGHOUT THE DURATION OF THE PROJECT IN ACCORDANCE WITH APPLICABLE NHDES/EPA STANDARDS. THE DETAILS PROVIDED REPRESENT MINIMUM PERMITTED CONTROLS ONLY AND SHALL BE SUPPLEMENTED BY THE CONTRACTOR AS NECESSARY.
9. ALL EXCAVATIONS SHALL BE THOROUGHLY SECURED ON A DAILY BASIS BY THE CONTRACTOR AT THE COMPLETION OF CONSTRUCTION OPERATIONS IN THE IMMEDIATE AREA.
10. THE CONTRACTOR SHALL STABILIZE ALL DITCHES, SWALES, AND PONDS PRIOR TO DIRECTING STORM WATER RUN-OFF TO THEM.
11. LIMITS OF WORK ARE SHOWN AS APPROXIMATE. THE CONTRACTOR SHALL COORDINATE ALL WORK TO PROVIDE SMOOTH TRANSITIONS. THIS INCLUDES GRADING, PAVEMENT, CURBING, SIDEWALKS AND ALIGNMENTS.
12. THE OWNER IS RESPONSIBLE FOR CONTACTING A GEOTECHNICAL ENGINEER TO EVALUATE ANY GROUNDWATER ISSUES ON SITE. THE GEOTECHNICAL ENGINEER IS RESPONSIBLE FOR DETERMINING THE METHODS IN WHICH TO ADDRESS ANY GROUNDWATER ISSUES THAT ARE FOUND ON SITE.
13. THE CONTRACTOR IS RESPONSIBLE FOR THE MEANS AND METHODS OF CONSTRUCTION AND FOR THE CONDITIONS AT THE SITE. WRITTEN DIMENSIONS HAVE PRECEDENCE OVER SCALED DIMENSIONS. THE CONTRACTOR SHALL VERIFY ALL DIMENSIONS AND REPORT DISCREPANCIES TO THE ENGINEER.
14. IT SHALL BE THE RESPONSIBILITY OF THE CONTRACTOR TO CHECK THE ACCURACY OF THE TOPOGRAPHY AND REPORT ANY DISCREPANCIES TO THE ENGINEER PRIOR TO ANY EARTHWORK BEING PERFORMED ON THE SITE. NO CLAIM FOR EXTRA WORK WILL BE CONSIDERED FOR PAYMENT AFTER EARTHWORK HAS COMMENCED.
15. IN THE EVENT OF A CONFLICT BETWEEN PLANS, SPECIFICATIONS, AND DETAILS, THE ENGINEER SHALL BE NOTIFIED IMMEDIATELY FOR CLARIFICATION.
16. IF CONDITIONS AT THE SITE ARE DIFFERENT THAN SHOWN THE ENGINEER SHALL BE NOTIFIED PRIOR TO PROCEEDING WITH THE AFFECTED WORK.
17. THESE PLANS WERE PREPARED UNDER THE SUPERVISION OF A LICENSED PROFESSIONAL ENGINEER. TFMORAN INC. ASSUMES NO LIABILITY AS A RESULT OF ANY CHANGES OR NON-CONFORMANCE WITH THESE PLANS EXCEPT UPON THE WRITTEN APPROVAL OF THE ENGINEER OF RECORD.
18. TFMORAN INC. ASSUMES NO LIABILITY FOR WORK PERFORMED WITHOUT AN ACCEPTABLE PROGRAM OF TESTING AND INSPECTION AS APPROVED BY THE ENGINEER OF RECORD.

LEGEND

PROPOSED		EXISTING
	IRON PIPE	IPF
	IRON PIN	IPinF or IRF
	DRILL HOLE	DHF
	EDGE OF PAVEMENT	
	EDGE OF GRAVEL	
	SILT SOCK/STUMP GRINDINGS BERM	
	SIGN	
	UTILITY POLE	
	TESTPIT	TP
x201.5	SPOT GRADE	x 200.5
200	INDEX CONTOUR	200
202	INTERMEDIATE CONTOUR	202
	EDGE OF WETLAND	E.O.W.
	BROOK, STREAM OR RIVER	
	S.C.S. SOILS BOUNDARY	
	TREELINE	HdC
	RIP-RAP	

DIG SAFE
MA ME NH RI VT
CALL 1-888-DIG-SAFE TOLL FREE
UTILITIES UNDERGROUND PLANT DAMAGE PREVENTION SYSTEM
CONTACT DIG SAFE 72 HOURS PRIOR TO CONSTRUCTION

WETLAND CERTIFICATION

STATE OF NEW HAMPSHIRE
CHRISTOPHER K. DANFORTH
2/15/2013
No. 077
CERTIFIED WETLAND SCIENTIST

WETLANDS SHOWN ON THIS PLAN WERE DELINEATED DURING AUGUST OF 2012 BY CHRISTOPHER K. DANFORTH OF TFMORAN, INC. CWS #077. THE WETLANDS WERE DELINEATED ACCORDING TO THE 1987 ARMY CORPS OF ENGINEERS WETLANDS DELINEATION MANUAL AND THE INTERIM REGIONAL SUPPLEMENT NE REGIONAL.

DOMINANT HYDRIC SOIL CONDITIONS WITHIN THE WETLANDS WERE IDENTIFIED UTILIZING THE CRITERIA OF "FIELD INDICATORS FOR IDENTIFYING HYDRIC SOILS IN NEW ENGLAND", VERSION 3, APRIL 2004.

DOMINANCE OF WETLAND VEGETATION WAS ASSESSED UTILIZING THE "NATIONAL LIST OF PLANT SPECIES THAT OCCUR IN WETLANDS: 1988 NORTHEAST" (REGION 1) (PORTER B. REED, JR.) THE AREA SURVEYED FOR WETLANDS INCLUDES LANDS ADACENT TO THE GRAVEL ROAD, THE EXISTING GRAVEL PIT, AND THE LAND BETWEEN THE OPEN AREA AND THE ISINGLASS RIVER. CONTIGUOUS AND ISOLATED POCKET WETLANDS WERE DELINEATED WITHIN THE 250 FOOT SHORELAND PROTECTION BUFFER TO THE ISINGLASS RIVER THAT ARE NOT DEPICTED HEREON.

Horizontal Scale 1"=40'
40 20 0 40
4 2 0 4
Vertical Scale 1"=4'

REV.	DATE	DESCRIPTION	DR	CK
3	01/17/13	PER DUBOIS & KING REVIEW	JH	JK

TAX MAP 210 LOT 57

ACCESS ROADWAY PLAN & PROFILE

GRAVEL EXCAVATION OPERATION

GREEN HILL ROAD, BARRINGTON, NH

OWNED BY

TRINITY CONSERVATION, LLC

PREPARED FOR

TRINITY CONSERVATION, LLC

SCALE: AS NOTED **SEPTEMBER 20, 2012**

TFM®
Civil Engineers
Structural Engineers
Traffic Engineers
Land Surveyors
Landscape Architects
Scientists

48 Constitution Drive
Bedford, NH 03110
Phone (603) 472-4488
Fax (603) 472-9747
www.tfmoran.com

FILE	DR	CK	CADFILE	
47052.00	JH	JK	47052-00 Site	SHEET 4 OF 12

Copyright 2012 ©Thomas F. Moran, Inc.
48 Constitution Drive, Bedford, N.H. 03110

All rights reserved. These plans and materials may not be copied, duplicated, replicated or otherwise reproduced in any form whatsoever without the prior written permission of Thomas F. Moran, Inc.

This plan is not effective unless signed by a duly authorized officer of Thomas F. Moran, Inc.

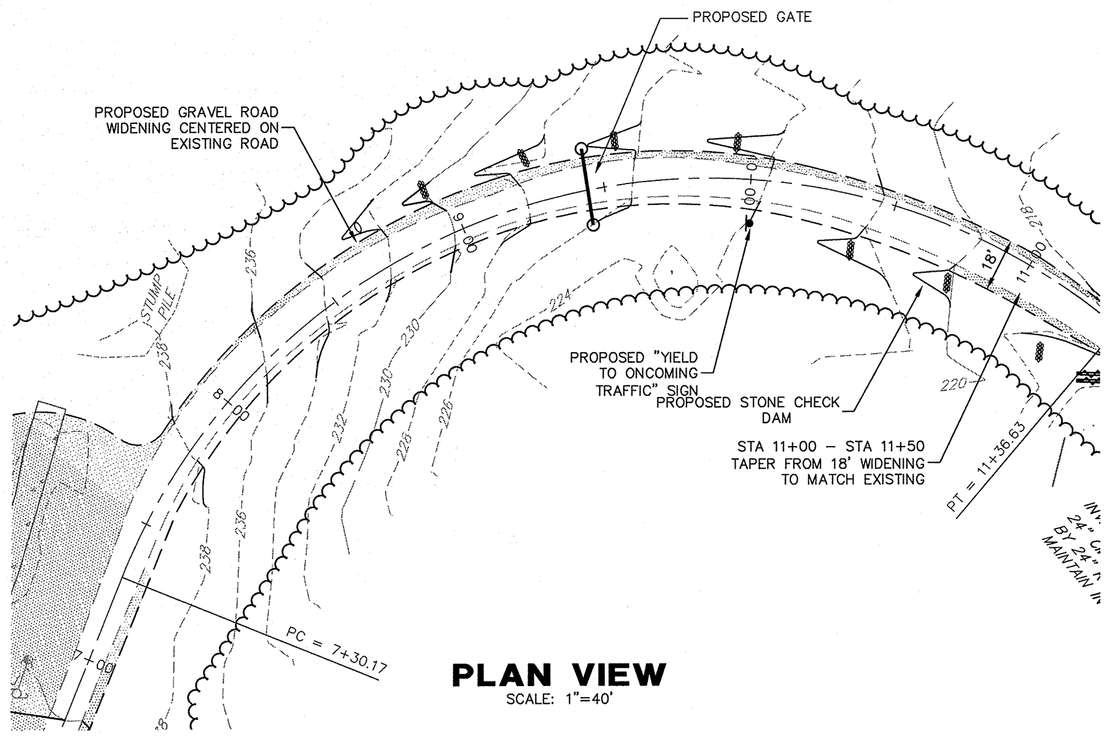

PLAN VIEW
SCALE: 1"=40'

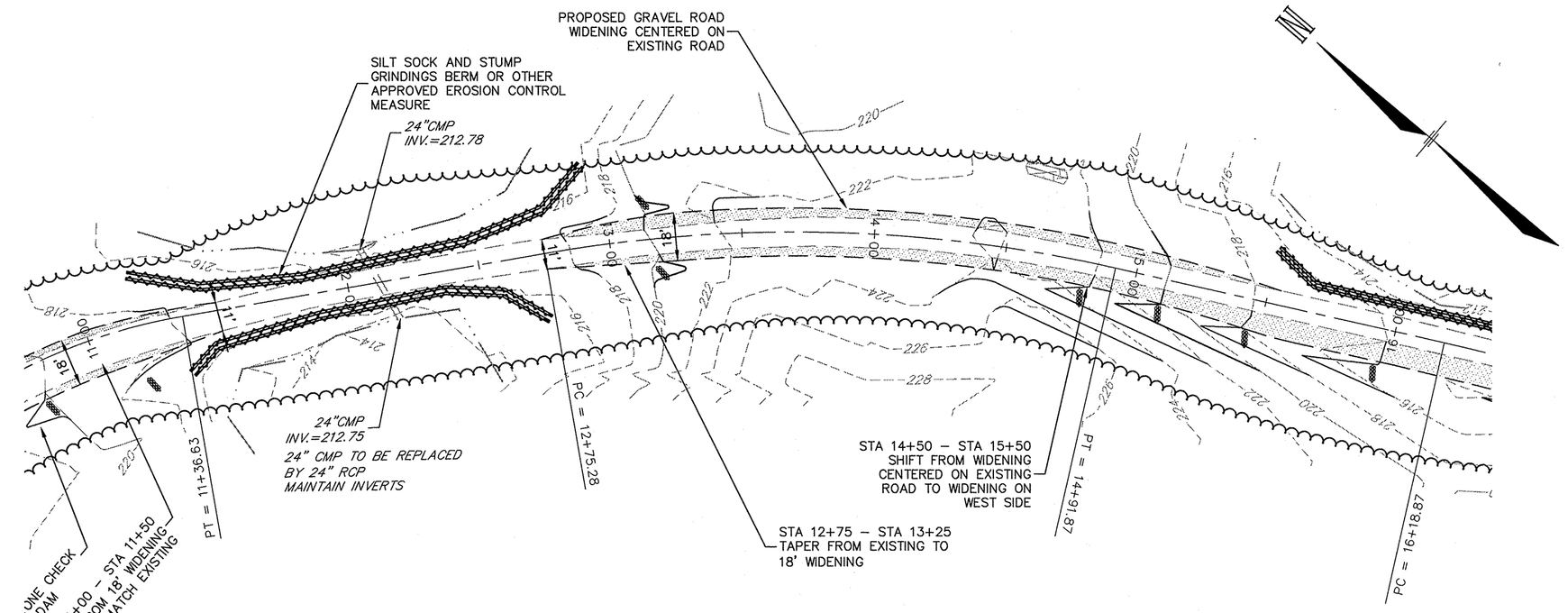

PLAN VIEW
SCALE: 1"=40'

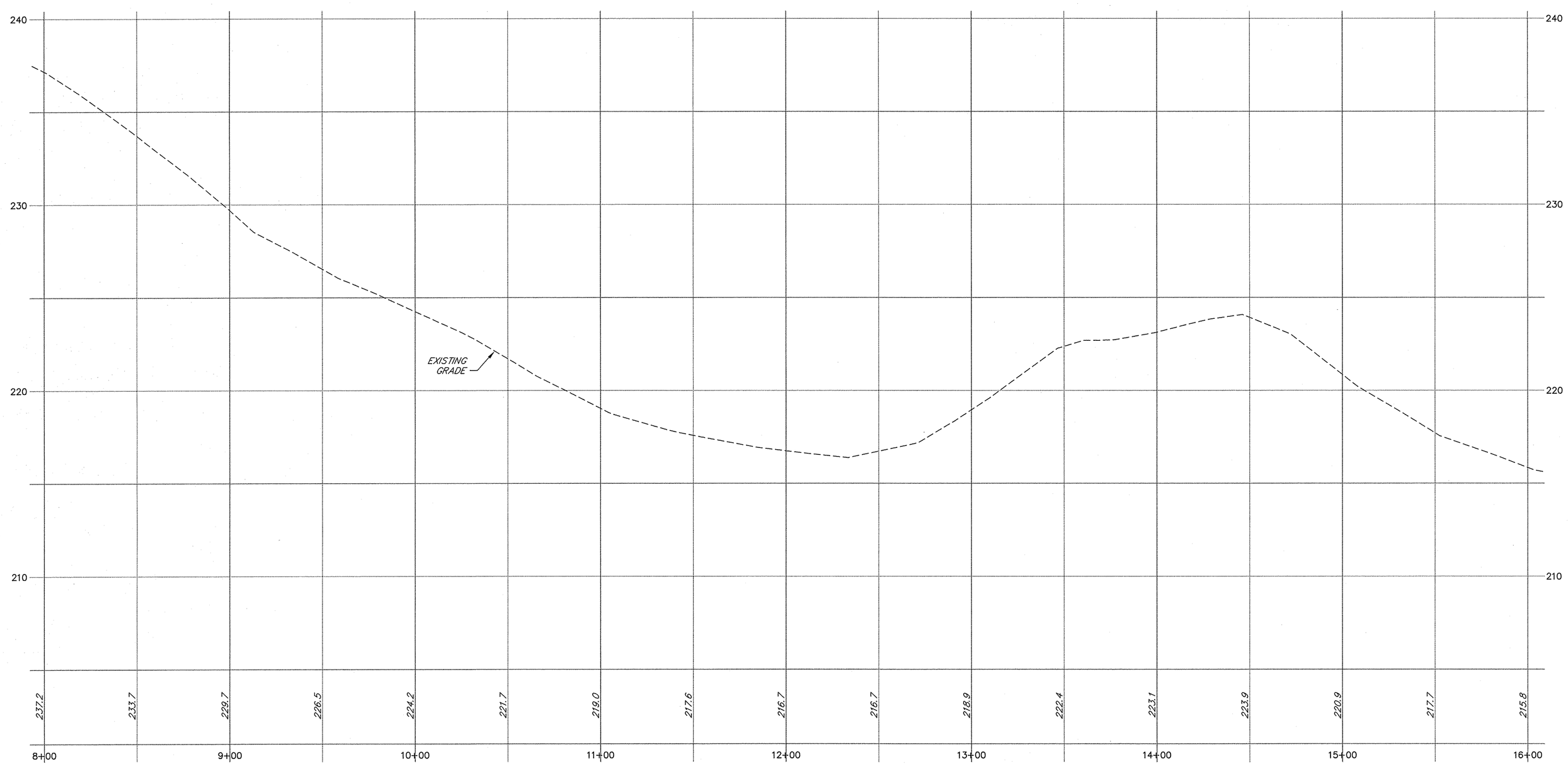

PROFILE
SCALE: 1"=40' HORIZ.
1"=4' VERT.

LEGEND

PROPOSED		EXISTING
	IRON PIPE	IPF
	IRON PIN	IPinF or IRF
	DRILL HOLE	DHF
	EDGE OF PAVEMENT	
	EDGE OF GRAVEL	
	SILT SOCK/STUMP GRINDINGS BERM	
	SIGN	
	UTILITY POLE	
	TESTPIT	TP
	SPOT GRADE	×200.5
	INDEX CONTOUR	
	INTERMEDIATE CONTOUR	
×201.5	EDGE OF WETLAND	E.O.W.
200	BROOK, STREAM OR RIVER	
202	S.C.S. SOILS BOUNDARY	HdC
	TREELINE	
	RIP–RAP	

WETLAND CERTIFICATION

WETLANDS SHOWN ON THIS PLAN WERE DELINEATED DURING AUGUST OF 2012 BY CHRISTOPHER K. DANFORTH OF TFMORAN, INC. CWS #077. THE WETLANDS WERE DELINEATED ACCORDING TO THE 1987 ARMY CORPS OF ENGINEERS WETLANDS DELINEATION MANUAL AND THE INTERIM REGIONAL SUPPLEMENT NE REGIONAL.

DOMINANT HYDRIC SOIL CONDITIONS WITHIN THE WETLANDS WERE IDENTIFIED UTILIZING THE CRITERIA OF "FIELD INDICATORS FOR IDENTIFYING HYDRIC SOILS IN NEW ENGLAND", VERSION 3, APRIL 2004.

DOMINANCE OF WETLAND VEGETATION WAS ASSESSED UTILIZING THE "NATIONAL LIST OF PLANT SPECIES THAT OCCUR IN WETLANDS: 1988 NORTHEAST" (REGION 1) (PORTER B. REED, JR.) THE AREA SURVEYED FOR WETLANDS INCLUDES LANDS ADACENT TO THE GRAVEL ROAD, THE EXISTING GRAVEL PIT, AND THE LAND BETWEEN THE OPEN AREA AND THE ISINGLASS RIVER. CONTIGUOUS AND ISOLATED POCKET WETLANDS WERE DELINEATED WITHIN THE 250 FOOT SHORELAND PROTECTION BUFFER TO THE ISINGLASS RIVER THAT ARE NOT DEPICTED HEREON.

STATE OF NEW HAMPSHIRE
CHRISTOPHER K. DANFORTH
9/25/2012
No. 077
CERTIFIED WETLAND SCIENTIST

TAX MAP 210 LOT 57

ACCESS ROADWAY PLAN & PROFILE

GRAVEL EXCAVATION OPERATION

GREEN HILL ROAD, BARRINGTON, NH

OWNED BY

TRINITY CONSERVATION, LLC

PREPARED FOR

TRINITY CONSERVATION, LLC

SCALE: AS NOTED **SEPTEMBER 20, 2012**

DIG SAFE
MA ME NH RI VT
CALL 1-888-DIG-SAFE (344-7233)
UNDERGROUND PLANT DAMAGE PREVENTION SYSTEM
CONTACT DIG SAFE 72 HOURS PRIOR TO CONSTRUCTION

Copyright 2012 ©Thomas F. Moran, Inc.
48 Constitution Drive, Bedford, N.H. 03110

All rights reserved. These plans and materials may not be copied, duplicated, replicated or otherwise reproduced in any form whatsoever without the prior written permission of Thomas F. Moran, Inc.

This plan is not effective unless signed by a duly authorized officer of Thomas F. Moran, Inc.

Horizontal Scale 1"=40'
40 20 0 40
4 2 0 4
Vertical Scale 1"=4'

REV.	DATE	DESCRIPTION	DR	CK
4	02/15/13	PER DUBOIS & KING REVIEW	JH	JK
3	01/17/13	PER DUBOIS & KING REVIEW	JH	JK

TFM
Civil Engineers
Structural Engineers
Traffic Engineers
Land Surveyors
Landscape Architects
Scientists

48 Constitution Drive
Bedford, NH 03110
Phone (603) 472–4488
Fax (603) 472–9747
www.tfmoran.com

FILE	DR	FB		
47052.00	JH	–		SHEET 5 OF 12
	CK JK	CADFILE	47052-00 Site	

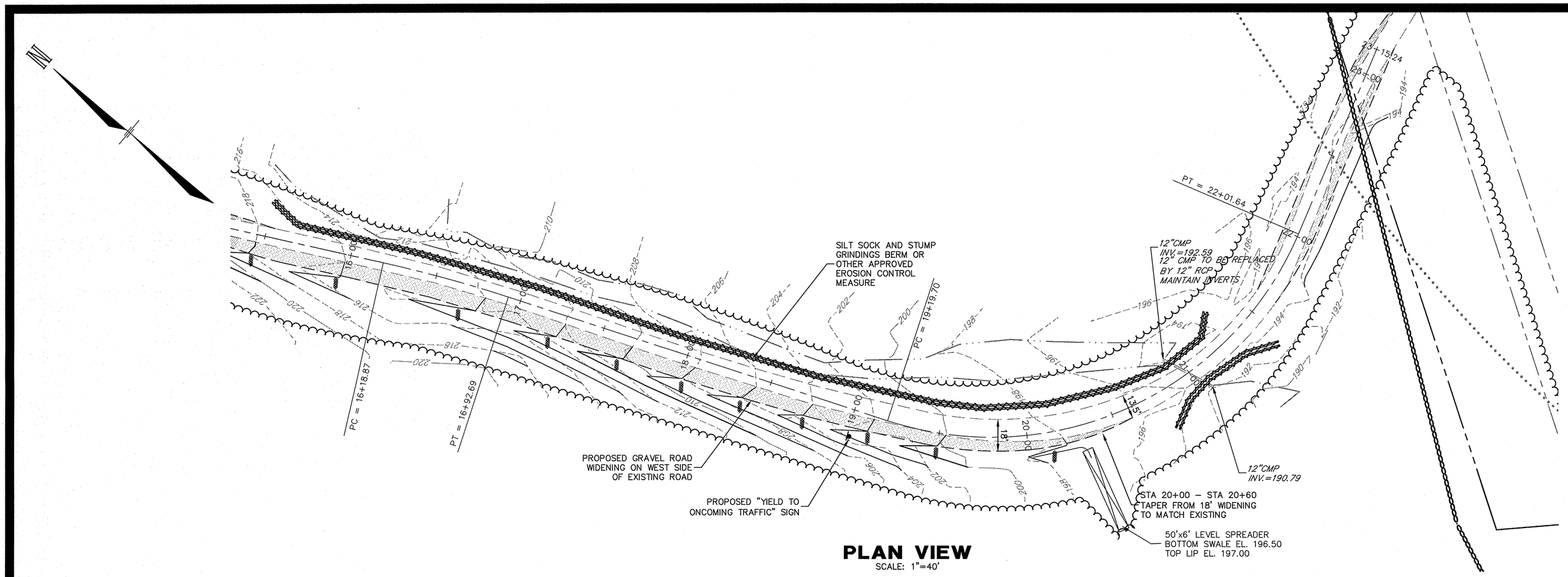

PLAN VIEW

SCALE: 1"=40'

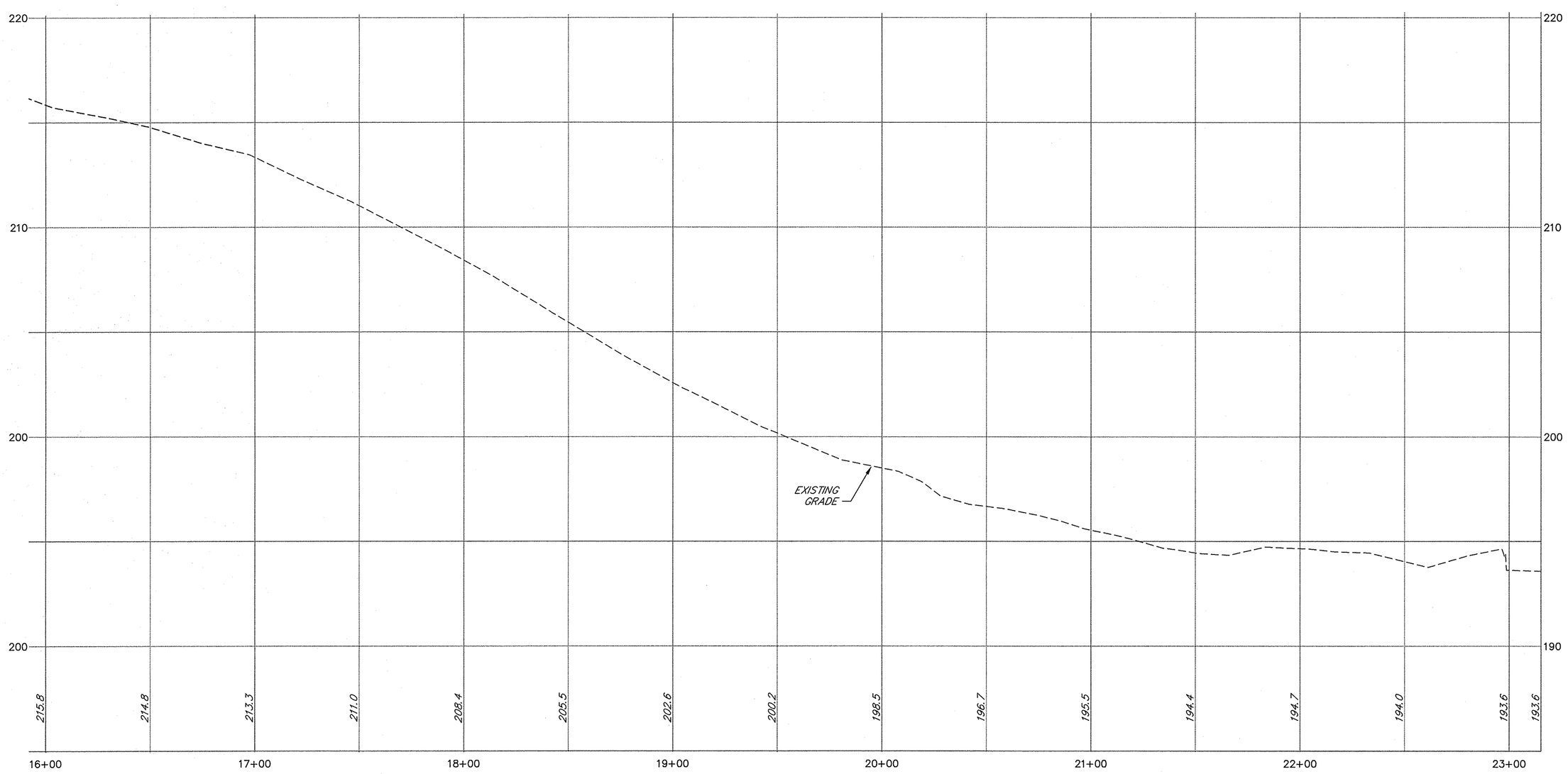

PROFILE

SCALE: 1"=40' HORIZ.
1"=4' VERT.

LEGEND

PROPOSED		EXISTING
	IRON PIPE	IPF
	IRON PIN	IPinF or IRF
	DRILL HOLE	DHF
	EDGE OF PAVEMENT	
	EDGE OF GRAVEL	
	SILT SOCK/STUMP GRINDINGS BERM	
	SIGN	
	UTILITY POLE	
	TESTPIT	TP
×201.5	SPOT GRADE	×200.5
200	INDEX CONTOUR	200
202	INTERMEDIATE CONTOUR	202
	EDGE OF WETLAND	WF#1 E.O.W.
	BROOK, STREAM OR RIVER	
	S.C.S. SOILS BOUNDARY	
	TREELINE	HdC
	RIP–RAP	

WETLAND CERTIFICATION

WETLANDS SHOWN ON THIS PLAN WERE DELINEATED DURING AUGUST OF 2012 BY CHRISTOPHER K. DANFORTH OF TFMORAN, INC. CWS #077. THE WETLANDS WERE DELINEATED ACCORDING TO THE 1987 ARMY CORPS OF ENGINEERS WETLANDS DELINEATION MANUAL AND THE INTERIM REGIONAL SUPPLEMENT NE REGIONAL.

DOMINANT HYDRIC SOIL CONDITIONS WITHIN THE WETLANDS WERE IDENTIFIED UTILIZING THE CRITERIA OF "FIELD INDICATORS FOR IDENTIFYING HYDRIC SOILS IN NEW ENGLAND", VERSION 3, APRIL 2004.

DOMINANCE OF WETLAND VEGETATION WAS ASSESSED UTILIZING THE "NATIONAL LIST OF PLANT SPECIES THAT OCCUR IN WETLANDS: 1988 NORTHEAST" (REGION 1) (PORTER B. REED, JR.) THE AREA SURVEYED FOR WETLANDS INCLUDES LANDS ADJACENT TO THE GRAVEL ROAD, THE EXISTING GRAVEL PIT, AND THE LAND BETWEEN THE OPEN AREA AND THE ISINGLASS RIVER. CONTIGUOUS AND ISOLATED POCKET WETLANDS WERE DELINEATED WITHIN THE 250 FOOT SHORELAND PROTECTION BUFFER TO THE ISINGLASS RIVER THAT ARE NOT DEPICTED HEREON.

STATE OF NEW HAMPSHIRE
CHRISTOPHER K. DANFORTH
9/25/2012
No. 077
CERTIFIED WETLAND SCIENTIST

DIG SAFE
MA ME NH RI VT
CALL 1-888-DIG-SAFE TOLL FREE
UTILITIES UNDERGROUND PLANT DAMAGE PREVENTION SYSTEM
CONTACT DIG SAFE 72 HOURS PRIOR TO CONSTRUCTION

TAX MAP 210 LOT 57

ACCESS ROADWAY PLAN & PROFILE

GRAVEL EXCAVATION OPERATION

GREEN HILL ROAD, BARRINGTON, NH

OWNED BY

TRINITY CONSERVATION, LLC

PREPARED FOR

TRINITY CONSERVATION, LLC

SCALE: AS NOTED **SEPTEMBER 20, 2012**

Copyright 2012 ©Thomas F. Moran, Inc.
48 Constitution Drive, Bedford, N.H. 03110

All rights reserved. These plans and materials may not be copied, duplicated, replicated or otherwise reproduced in any form whatsoever without the prior written permission of Thomas F. Moran, Inc.

This plan is not effective unless signed by a duly authorized officer of Thomas F. Moran, Inc.

Horizontal Scale 1"=40'
40 20 0 40
4 2 0 4
Vertical Scale 1"=4'

REV.	DATE	DESCRIPTION	DR	CK
4	02/15/13	PER DUBOIS & KING REVIEW	JH	JK
3	01/17/13	PER DUBOIS & KING REVIEW	JH	JK

TFM®
Civil Engineers
Structural Engineers
Traffic Engineers
Land Surveyors
Landscape Architects
Scientists

48 Constitution Drive
Bedford, NH 03110
Phone (603) 472-4488
Fax (603) 472-9747
www.tfmoran.com

FILE	47052.00	DR	JH	FB	–	SHEET 6 OF 12
		CK	JK	CADFILE	47052-00 Site	

NOTE

SIGHT DISTANCE HAS BEEN EVALUATED IN ACCORDANCE WITH NHDOT CRITERIA.

LEGEND

PROPOSED		EXISTING
	IRON PIPE	IPF
	IRON PIN	IPinF or IRF
	DRILL HOLE	DHF
	EDGE OF PAVEMENT	
	EDGE OF GRAVEL	
	SIGN	
×201.5	UTILITY POLE	
200	SPOT GRADE	×200.5
202	INDEX CONTOUR	200
	INTERMEDIATE CONTOUR	202
	TREELINE	

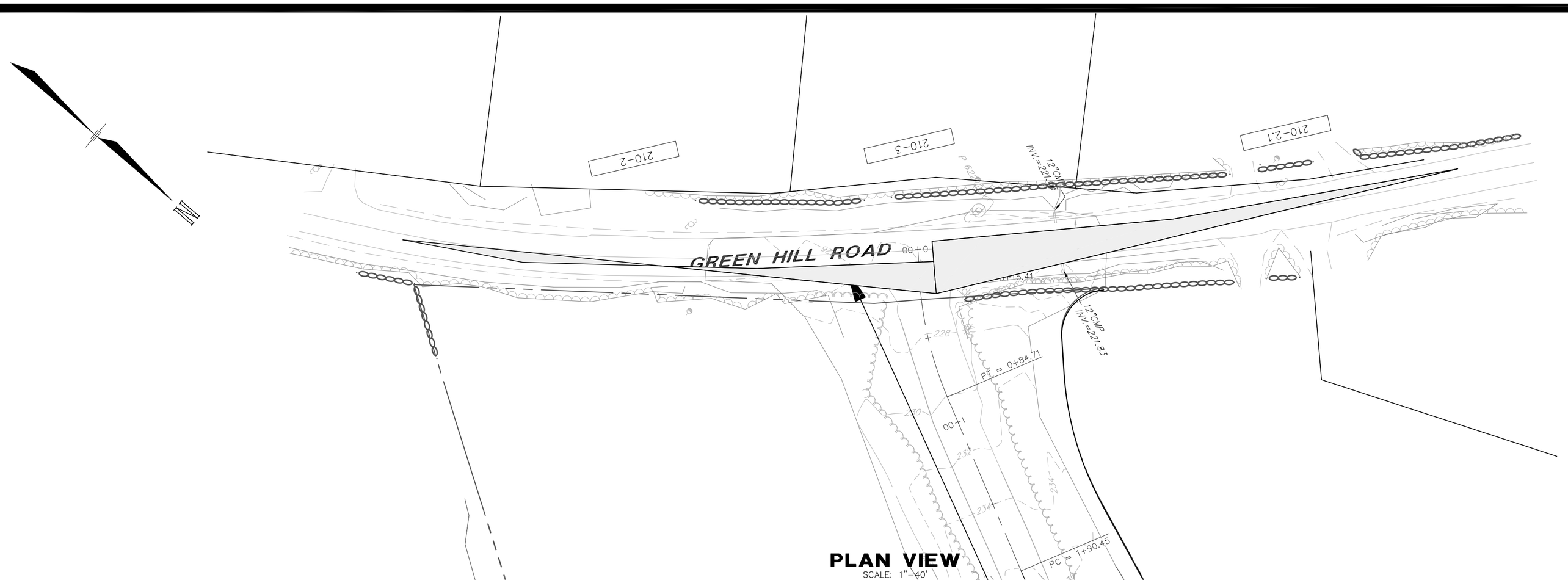

PLAN VIEW
SCALE: 1"=40'

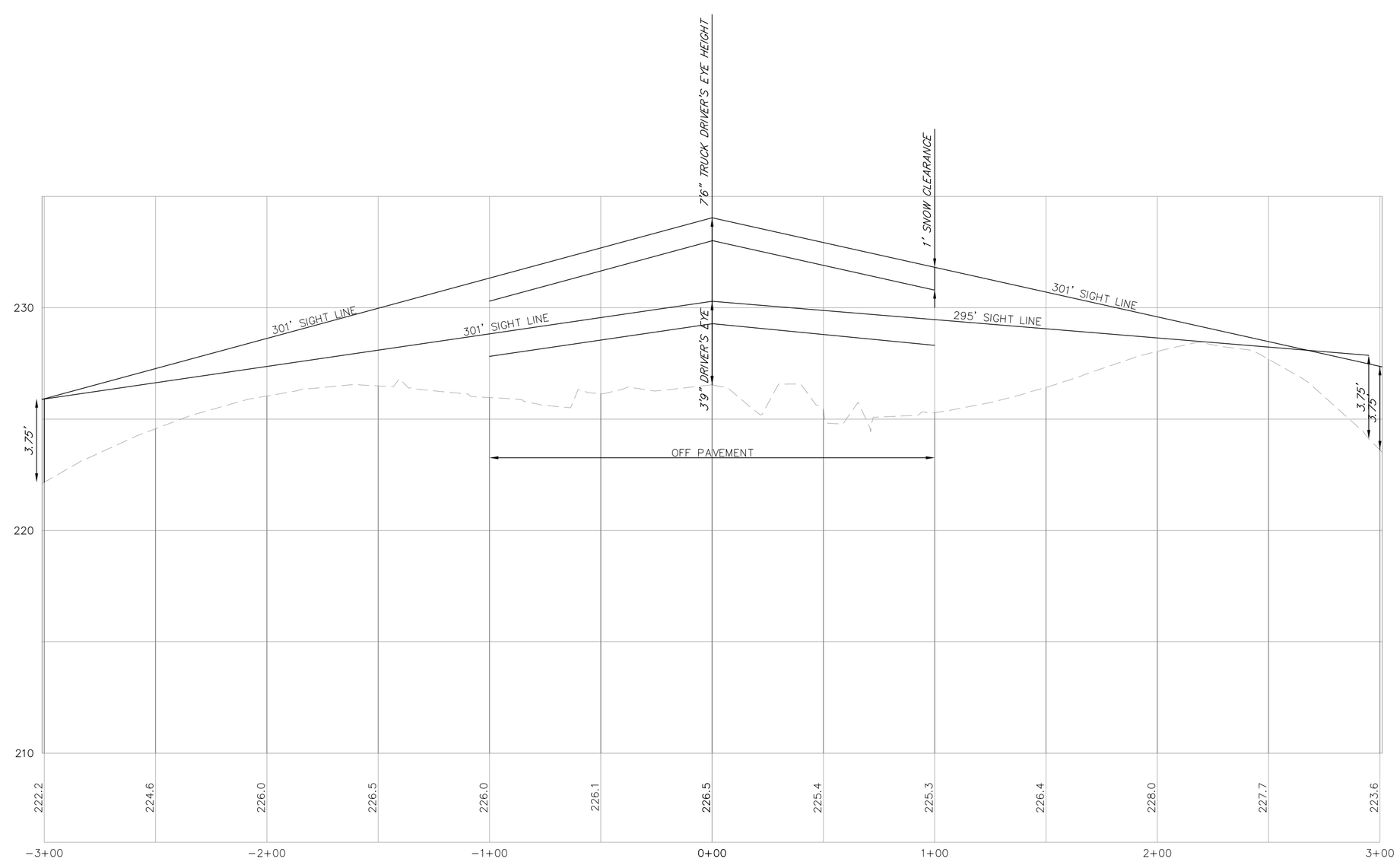

PROFILE
SCALE: 1"=40' HORIZ.
1"=4' VERT.

Horizontal Scale 1"=40'
40 20 0 40
4 2 0 4
Vertical Scale 1"=4'

DIG SAFE
MA ME NH RI VT
CALL 1-888-DIG-SAFE TOLL FREE
UTILITIES UNDERGROUND PLANT DAMAGE PREVENTION SYSTEM
CONTACT DIG SAFE 72 HOURS
PRIOR TO CONSTRUCTION

Copyright 2012 ©Thomas F. Moran, Inc.
48 Constitution Drive, Bedford, N.H. 03110

All rights reserved. These plans and materials may not be copied, duplicated, replicated or otherwise reproduced in any form whatsoever without the prior written permission of Thomas F. Moran, Inc.

This plan is not effective unless signed by a duly authorized officer of Thomas F. Moran, Inc.

REV.	DATE	DESCRIPTION	DR	CK
4	02/15/13	PER DUBOIS & KING REVIEW	JH	JK

TAX MAP 210 LOT 57

SIGHTLINE PLAN & PROFILE

GRAVEL EXCAVATION OPERATION

GREEN HILL ROAD, BARRINGTON, NH

OWNED BY

TRINITY CONSERVATION, LLC

PREPARED FOR

TRINITY CONSERVATION, LLC

SCALE: AS NOTED **JANUARY 30, 2013**

TFM®
Civil Engineers
Structural Engineers
Traffic Engineers
Land Surveyors
Landscape Architects
Scientists

48 Constitution Drive
Bedford, NH 03110
Phone (603) 472-4488
Fax (603) 472-9747
www.tfmoran.com

FILE	DR	FB	
47052.00	JH	–	SHEET 6A OF 12
	CK JK	CADFILE 47052-00 Site	

OPERATION & MAINTENANCE NOTES:

1. THE OPERATION IS PROPOSED TO BE RUN YEAR-ROUND, EXCLUDING MAJOR HOLIDAYS AND AS OTHERWISE INDICATED IN THIS LETTER. NORMAL BUSINESS HOURS ARE PROPOSED TO BE MONDAY THROUGH FRIDAY FROM 8:00AM TO 5:00 PM, WHERE THE BUSINESS WILL BE OPEN TO THE PUBLIC. ROUTINE MAINTENANCE MAY BE PERFORMED ON THE GROUNDS ON SATURDAY FROM 8:00 AM TO 5:00 PM; HOWEVER THE BUSINESS WILL BE CLOSED TO THE PUBLIC ON SATURDAY. ROUTINE MAINTENANCE SHALL CONSIST OF CLEANING EQUIPMENT, RECLAMATION, INSPECTION AND MAINTENANCE OF STORM WATER TREATMENT AND CONVEYANCE PRACTICES, MAINTENANCE OF THE ACCESS ROADWAY AND RELATED ACTIVITIES.

2. BLASTING IS LIMITED TO ONE DAY PER TWO MONTHS. OPERATOR IS REQUIRED TO PROVIDE 48 HOURS NOTICE TO ABUTTERS IN ADVANCE OF BLASTING OPERATIONS.

3. THE USE OF ACOUSTICAL WALLS SHALL BE IMPLEMENTED DURING ANY CRUSHING. SOUND LEVELS SHALL BE RECORDED AT ALL PROPERTY LINES DURING CRUSHING. CRUSHING SHALL TEMPORARILY CEASE AND DESIST IF SOUND LEVELS EXCEED 75 DECIBELS AT THE PROPERTY LINE UNTIL ADDITIONAL SOUND MITIGATION PRACTICES ARE EMPLOYED.

4. BLASTING SHALL CONFORM TO THE NH DEPARTMENT OF SAFETY RULES ESTABLISHED PER SAF-C 1600. THE BLASTING CONTRACTOR WILL MONITOR GROUND VIBRATIONS PRODUCED BY EACH BLAST AND WILL PRODUCE PRINTED SEISMOGRAMS OF VIBRATIONS THAT ARE RECORDED IN UNITS OF PARTICLE VELOCITY IN INCHES/SECONDS. THESE PRINTED MEASUREMENTS WILL BE RETAINED BY THE BLASTING CONTRACTOR FOR A PERIOD OF AT LEAST SIX MONTHS AND WILL BE MADE AVAILABLE TO THE TOWN AND STATE OFFICIALS UPON REQUEST.

5. DUST CONTROL WILL BE IMPLEMENTED AS NEEDED ONCE SITE GRADING HAS BEGUN AND DURING WINDY CONDITIONS (FORECASTED OR ACTUAL WIND CONDITIONS OF 20 MPH OR GREATER) WHILE SITE GRADING IS OCCURRING. SPRAYING OF POTABLE WATER AT A RATE OF 300 GALLONS PER ACRE OR LESS WILL BE PERFORMED BY A MOBILE PRESSURE-TYPE DISTRIBUTOR TRUCK NO MORE THAN THREE TIMES A DAY DURING THE MONTHS OF MAY THRU SEPTEMBER AND ONCE PER DAY DURING THE MONTHS OF OCTOBER THRU APRIL OR WHENEVER THE DRYNESS OF THE SOIL WARRANTS IT.

6. OPERATOR SHALL FOLLOW INSTALLATION AND MAINTENANCE SCHEDULE DETAILED IN THE STORMWATER POLLUTION PREVENTION PLAN (SWPPP) DURING EXCAVATION ACTIVITIES, AND SHALL PREPARE AND POSSESS ON SITE AN OPERATIONS PLAN INCLUDING BUT NOT LIMITED SPILL PREVENTION, CONTROL AND COUNTERMEASURES TO CONTROL THE USE AND STORAGE OF REGULATED SUBSTANCES.
COPIES OF THE SWPPP INSPECTION AND MAINTENANCE LOGS SHALL BE KEPT ONSITE AT ALL TIMES. THESE LOGS SHALL BE REGULARLY SUBMITTED TO THE ISINGLASS RIVER LOCAL ADVISORY COMMITTEE.

BLASTING BMP's

1) IDENTIFY DRINKING WATER WELLS LOCATED WITHIN 2000 FEET OF THE PROPOSED BLASTING ACTIVITIES. DEVELOP A GROUNDWATER QUALITY SAMPLING PROGRAM TO MONITOR FOR NITRATE AND NITRITE EITHER IN THE DRINKING WATER SUPPLY WELLS OR IN OTHER WELLS THAT ARE REPRESENTATIVE OF THE DRINKING WATER SUPPLY WELLS IN THE AREA. THE PLAN MUST INCLUDE PRE AND POST BLAST WATER QUALITY MONITORING AND BE APPROVED BY NHDES PRIOR TO INITIATING BLASTING. THE GROUNDWATER SAMPLING PROGRAM MUST BE IMPLEMENTED ONCE APPROVED BY NHDES.
2) THE FOLLOWING BEST MANAGEMENT PROCEDURES FOR BLASTING SHALL BE COMPLIED WITH:
(1) LOADING PRACTICES. THE FOLLOWING BLASTHOLE LOADING PRACTICES TO MINIMIZE ENVIRONMENTAL EFFECTS SHALL BE FOLLOWED:
(A) DRILLING LOGS SHALL BE MAINTAINED BY THE DRILLER AND COMMUNICATED DIRECTLY TO THE BLASTER. THE LOGS SHALL INDICATE DEPTHS AND LENGTHS OF VOIDS, CAVITIES, AND FAULT ZONES OR OTHER WEAK ZONES ENCOUNTERED AS WELL AS GROUNDWATER CONDITIONS.
(B) EXPLOSIVE PRODUCTS SHALL BE MANAGED ON-SITE SO THAT THEY ARE EITHER USED IN THE BOREHOLE, RETURNED TO THE DELIVERY VEHICLE, OR PLACED IN SECURE CONTAINERS FOR OFF-SITE DISPOSAL.
(C) SPILLAGE AROUND THE BOREHOLE SHALL EITHER BE PLACED IN THE BOREHOLE OR CLEANED UP AND RETURNED TO AN APPROPRIATE VEHICLE FOR HANDLING OR PLACEMENT IN SECURED CONTAINERS FOR OFF-SITE DISPOSAL.
(D) LOADED EXPLOSIVES SHALL BE DETONATED AS SOON AS POSSIBLE AND SHALL NOT BE LEFT IN THE BLASTHOLES OVERNIGHT, UNLESS WEATHER OR OTHER SAFETY CONCERNS REASONABLY DICTATE THAT DETONATION SHOULD BE POSTPONED.
(E) LOADING EQUIPMENT SHALL BE CLEANED IN AN AREA WHERE WASTEWATER CAN BE PROPERLY CONTAINED AND HANDLED IN A MANNER THAT PREVENTS RELEASE OF CONTAMINANTS TO THE ENVIRONMENT.
(F) EXPLOSIVES SHALL BE LOADED TO MAINTAIN GOOD CONTINUITY IN THE COLUMN LOAD TO PROMOTE COMPLETE DETONATION. INDUSTRY ACCEPTED LOADING PRACTICES FOR PRIMING, STEMMING, DECKING AND COLUMN RISE NEED TO BE ATTENDED TO.
(2) EXPLOSIVE SELECTION. THE FOLLOWING BMPS SHALL BE FOLLOWED TO REDUCE THE POTENTIAL FOR GROUNDWATER CONTAMINATION WHEN EXPLOSIVES ARE USED:
(A) EXPLOSIVE PRODUCTS SHALL BE SELECTED THAT ARE APPROPRIATE FOR SITE CONDITIONS AND SAFE BLAST EXECUTION.
(B) EXPLOSIVE PRODUCTS SHALL BE SELECTED THAT HAVE THE APPROPRIATE WATER RESISTANCE FOR THE SITE CONDITIONS PRESENT TO MINIMIZE THE POTENTIAL FOR HAZARDOUS EFFECT OF THE PRODUCT UPON GROUNDWATER.
(3) PREVENTION OF MISFIRES. APPROPRIATE PRACTICES SHALL BE DEVELOPED AND IMPLEMENTED TO PREVENT MISFIRES.
(4) MUCK PILE MANAGEMENT. MUCK PILES (THE BLASTED PIECES OF ROCK) AND ROCK PILES SHALL BE MANAGED IN A MANNER TO REDUCE THE POTENTIAL FOR CONTAMINATION BY IMPLEMENTING THE FOLLOWING MEASURES:
(A) REMOVE THE MUCK PILE FROM THE BLAST AREA AS SOON AS REASONABLY POSSIBLE.
(B) MANAGE THE INTERACTION OF BLASTED ROCK PILES AND STORMWATER TO PREVENT CONTAMINATION OF WATER SUPPLY WELLS OR SURFACE WATER.
(5) SPILL PREVENTION MEASURES AND SPILL MITIGATION. SPILL PREVENTION AND SPILL MITIGATION MEASURES SHALL BE IMPLEMENTED TO PREVENT THE RELEASE OF FUEL AND OTHER RELATED SUBSTANCES TO THE ENVIRONMENT. THE MEASURES SHALL INCLUDE AT A MINIMUM:
(A) THE FUEL STORAGE REQUIREMENTS SHALL INCLUDE:
1. STORAGE OF REGULATED SUBSTANCES ON AN IMPERVIOUS SURFACE;
2. SECURE STORAGE AREAS AGAINST UNAUTHORIZED ENTRY;
3. LABEL REGULATED CONTAINERS CLEARLY AND VISIBLY;
4. INSPECT STORAGE AREAS WEEKLY;
5. COVER REGULATED CONTAINERS IN OUTSIDE STORAGE AREAS;
6. WHEREVER POSSIBLE, KEEP REGULATED CONTAINERS THAT ARE STORED OUTSIDE MORE THAN 50 FEET FROM SURFACE WATER AND STORM DRAINS, 75 FEET FROM PRIVATE WELLS, AND 400 FEET FROM PUBLIC WELLS; AND
7. SECONDARY CONTAINMENT IS REQUIRED FOR CONTAINERS CONTAINING REGULATED SUBSTANCES STORED OUTSIDE, EXCEPT FOR ON PREMISE USE HEATING FUEL TANKS, OR ABOVEGROUND OR UNDERGROUND STORAGE TANKS OTHERWISE REGULATED.
(B) THE FUEL HANDLING REQUIREMENTS SHALL INCLUDE:
1. EXCEPT WHEN IN USE, KEEP CONTAINERS CONTAINING REGULATED SUBSTANCES CLOSED AND SEALED;
2. PLACE DRIP PANS UNDER SPIGOTS, VALVES, AND PUMPS;
3. HAVE SPILL CONTROL AND CONTAINMENT EQUIPMENT READILY AVAILABLE IN ALL WORK AREAS;
4. USE FUNNELS AND DRIP PANS WHEN TRANSFERRING REGULATED SUBSTANCES; AND
5. PERFORM TRANSFERS OF REGULATED SUBSTANCES OVER AN IMPERVIOUS SURFACE.
(C) THE TRAINING OF ON-SITE EMPLOYEES AND THE ON-SITE POSTING OF RELEASE RESPONSE INFORMATION DESCRIBING WHAT TO DO IN THE EVENT OF A SPILL OF REGULATED SUBSTANCES.
(D) FUELING AND MAINTENANCE OF EXCAVATION, EARTHMOVING AND OTHER CONSTRUCTION RELATED EQUIPMENT WILL COMPLY WITH THE REGULATIONS OF THE NEW HAMPSHIRE DEPARTMENT OF ENVIRONMENTAL SERVICES [NOTE THESE REQUIREMENTS ARE SUMMARIZED IN WD-DWGB-22-6 BEST MANAGEMENT PRACTICES FOR FUELING AND MAINTENANCE OF EXCAVATION AND EARTHMOVING EQUIPMENT" OR ITS SUCCESSOR DOCUMENT. (SEE HTTP://DES.NH.GOV/ORGANIZATION/COMMISSIONER/PIP/FACTSHEETS/DWGB/DOCUMENTS/DWGB-22-6.PDF)

PHASING NOTE

THE GRAVEL EXCAVATION OPERATION WILL BE PERFORMED SO AS TO ONLY DISTURB 10 ACRES AT A TIME. THE AREA COMPLETED WILL BE STABILIZED WITH GRASS PRIOR TO CLEARING, GRUBBING AND EXCAVATING THE NEXT PHASE AREA. AREAS SHOWN ARE AN EXAMPLE OF POSSIBLE PHASING, BUT THE OPERATOR MAY VARY PHASING SEQUENCE (WHILE ONLY DISTURBING 10 ACRES AT ANY GIVEN TIME).

THE OPERATOR SHALL UPGRADE THE ENTRANCE DRIVEWAY AS SHOWN PRIOR TO BEGINNING THE GRAVEL EXCAVATION OPERATION, THEN BEGIN THE OPERATION IN THE EXISTING OPEN AREA (PHASE 1). A SEDIMENTATION BASIN OR OTHER DRAINAGE SYSTEM SHALL BE PROVIDED TO TREAT RUNOFF PRIOR TO LEAVING THE PROJECT AREA.

Copyright 2012 ©Thomas F. Moran, Inc.
48 Constitution Drive, Bedford, N.H. 03110

All rights reserved. These plans and materials may not be copied, duplicated, replicated or otherwise reproduced in any form whatsoever without the prior written permission of Thomas F. Moran, Inc.

This plan is not effective unless signed by a duly authorized officer of Thomas F. Moran, Inc.

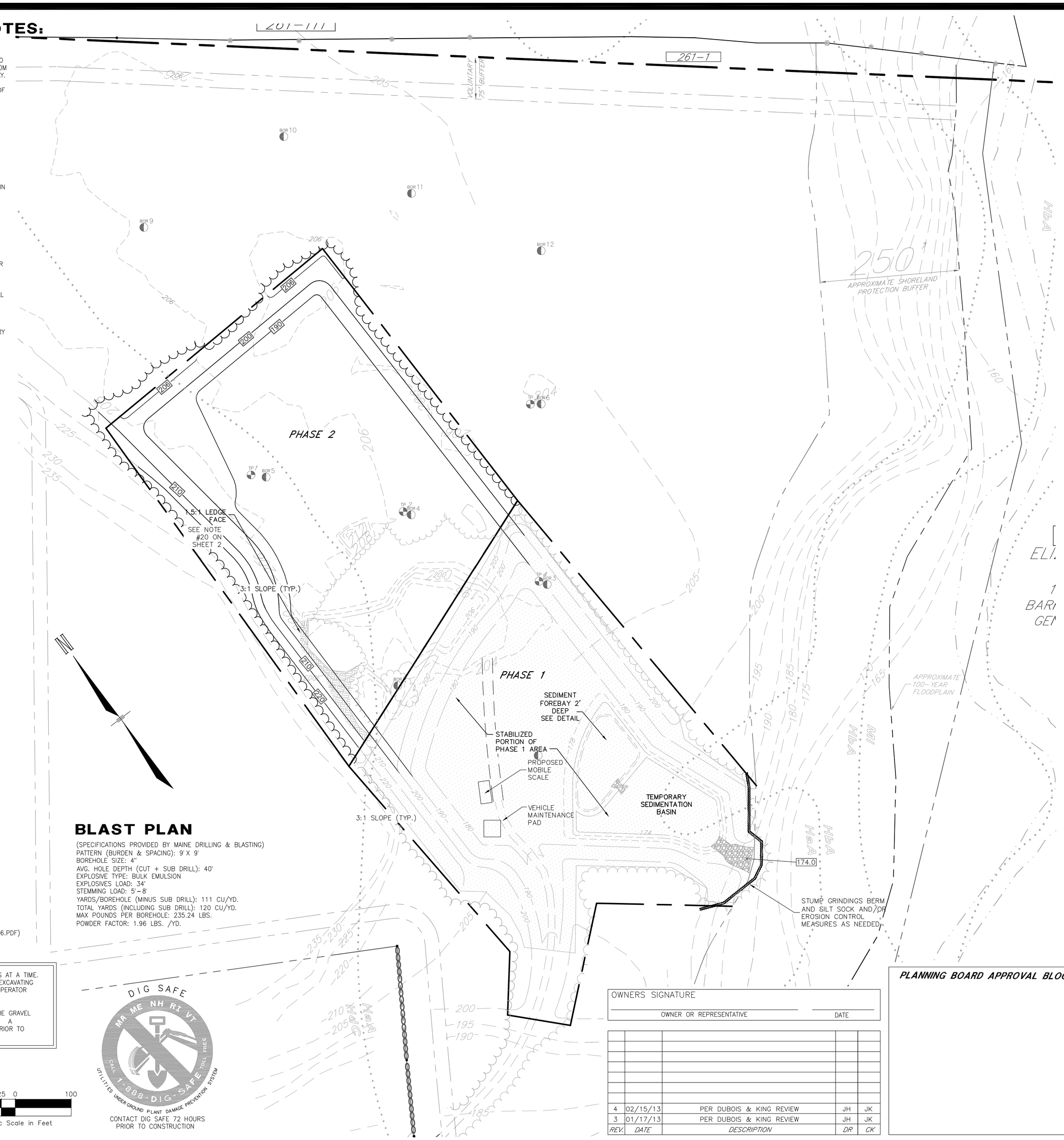

BLAST PLAN

(SPECIFICATIONS PROVIDED BY MAINE DRILLING & BLASTING)
PATTERN (BURDEN & SPACING): 9'X 9'
BOREHOLE SIZE: 4"
AVG. HOLE DEPTH (CUT + SUB DRILL): 40'
EXPLOSIVE TYPE: BULK EMULSION
EXPLOSIVES LOAD: 34'
STEMMING LOAD: 5'-8'
YARDS/BOREHOLE (MINUS SUB DRILL): 111 CU/YD.
TOTAL YARDS (INCLUDING SUB DRILL): 120 CU/YD.
MAX POUNDS PER BOREHOLE: 235.24 LBS.
POWDER FACTOR: 1.96 LBS. /YD.

100 50 25 0 100
Graphic Scale in Feet

DIG SAFE
MA ME NH RI VT
CALL 1-888-DIG-SAFE TOLL FREE
UTILITIES UNDERGROUND PLANT DAMAGE PREVENTION SYSTEM
CONTACT DIG SAFE 72 HOURS PRIOR TO CONSTRUCTION

OWNERS SIGNATURE

OWNER OR REPRESENTATIVE DATE

REV.	DATE	DESCRIPTION	DR	CK
4	02/15/13	PER DUBOIS & KING REVIEW	JH	JK
3	01/17/13	PER DUBOIS & KING REVIEW	JH	JK

PLANNING BOARD APPROVAL BLOCK

NOTES

1. THE PURPOSE OF THIS PLAN IS TO SHOW THE PHASE 2 (10 AC.) EXCAVATION OF THE SITE.
2. TOPOGRAPHY SHOWN IS A COMPILATION OF GROUND SURVEY BY THIS OFFICE AND INFORMATION TAKEN FROM THE REFERENCE PLAN. GROUND SURVEY DATUM IS NAD 88 COORS.
3. WRITTEN DIMENSIONS HAVE PRECEDENCE OVER SCALED DIMENSIONS. THE CONTRACTOR SHALL USE CAUTION WHEN SCALING REPRODUCED PLANS. IN CASE OF CONFLICT BETWEEN THIS PLAN SET AND ANY OTHER DRAWING AND/OR SPECIFICATION, THE ENGINEER SHALL BE NOTIFIED IMMEDIATELY FOR CLARIFICATIONS.
4. THE CONTRACTOR IS RESPONSIBLE FOR THE MEANS AND METHODS OF CONSTRUCTION AND FOR CONDITIONS AT THE SITE. THESE PLANS, PREPARED BY TFMORAN, INC., DO NOT EXTEND TO OR INCLUDE SYSTEMS PERTAINING TO THE SAFETY OF THE CONSTRUCTION CONTRACTOR OR THEIR EMPLOYEES, AGENTS OR REPRESENTATIVES IN THE PERFORMANCE OF THE WORK. THE SEAL OF THE SURVEYOR OR ENGINEER HEREON DOES NOT EXTEND TO ANY SUCH SAFETY SYSTEMS THAT MAY NOW OR HEREAFTER BE INCORPORATED INTO THESE PLANS. THE CONSTRUCTION CONTRACTOR SHALL PREPARE OR OBTAIN THE APPROPRIATE SAFETY SYSTEMS WHICH MAY BE REQUIRED BY THE U.S. OCCUPATIONAL SAFETY AND HEALTH ADMINISTRATION (OSHA) AND/OR LOCAL REGULATIONS.
5. IT SHALL BE THE CONTRACTOR'S RESPONSIBILITY TO FAMILIARIZE HIMSELF WITH THE SITE AND ALL EXISTING CONDITIONS SURROUNDING IT AND THEREON. THE CONTRACTOR SHALL ADVISE THE APPROPRIATE AUTHORITY OF HIS INTENTIONS AT LEAST 48 HOURS IN ADVANCE.
6. THE CONTRACTOR SHALL MAINTAIN EMERGENCY ACCESS TO ALL AREAS AFFECTED BY HIS WORK AT ALL TIMES.
7. IN THE EVENT OF A CONFLICT BETWEEN PLANS, SPECIFICATIONS, AND DETAILS, THE ENGINEER SHALL BE NOTIFIED IMMEDIATELY FOR CLARIFICATION.
8. IF CONDITIONS AT THE SITE ARE DIFFERENT THAN SHOWN ON THE PLANS, THE ENGINEER SHALL BE NOTIFIED PRIOR TO PROCEEDING WITH THE AFFECTED WORK.
9. THESE PLANS WERE PREPARED UNDER THE SUPERVISION OF A LICENSED PROFESSIONAL ENGINEER. TFMORAN INC. ASSUMES NO LIABILITY AS A RESULT OF ANY CHANGES OR NON-CONFORMANCE WITH THESE PLANS EXCEPT UPON THE WRITTEN APPROVAL OF THE ENGINEER OF RECORD.
10. TFMORAN INC. ASSUMES NO LIABILITY FOR WORK PERFORMED WITHOUT AN ACCEPTABLE PROGRAM OF TESTING AND INSPECTION AS APPROVED BY THE ENGINEER OF RECORD.
11. WARM SEASON GRASS MIX SHALL BE USED TO RECLAIM THE FLOOR OF THE EXCAVATION SITE. SPECIFICATION FOR WARM SEASON GRASS MIX IS LOCATED ON SHEET 10 OF THIS PLAN SET. EMBANKMENTS SHALL BE SEEDED WITH USDA CONSERVATION SERVICE MIX B. SPECIFICATIONS FOR CONSERVATION MIX B ARE LOCATED ON SHEET 10 OF THIS PLAN SET.
12. PERMANENT AND TEMPORARY EMBANKMENTS THAT ARE NOT ACTIVELY BEING WORKED ON SHALL BE STABILIZED WITH LOAM, SEED AND NORTH AMERICAN GREEN MATTING.
13. OPERATOR/EXCAVATOR SHALL OBSERVE WATER LEVEL IN MONITORING WELLS DURING APRIL ANNUALLY. FINAL GRADES SHALL BE AJUSTED AS NECESSARY TO PROVIDE 4 FEET (MIN.) SEPARATION ABOVE WATER TABLE.
14. WHERE LEDGE IS ENCOUNTERED AT DESIGN FINISH GRADE OPERATOR SHALL OVERBLAST AND BACKFILL TO DEISGN FINISH GRADES USING OVERBURDEN AND/OR OTHER MATERIAL DETERMINED BY ENGINEER.

LEGEND

PROPOSED		EXISTING
	IRON PIPE	IPF
	IRON PIN	IPinF or IRF
	DRILL HOLE	DHF
	EDGE OF PAVEMENT	
	EDGE OF GRAVEL	
	SILT SOCK/STUMP GRINDINGS BERM	
	SIGN	
	UTILITY POLE	
	TESTPIT	TP
200	INDEX CONTOUR	200
202	INTERMEDIATE CONTOUR	202
	BROOK, STREAM OR RIVER	
	S.C.S. SOILS BOUNDARY	HdC
	TREELINE	
	RIP-RAP	

WETLAND CERTIFICATION

WETLANDS SHOWN ON THIS PLAN WERE DELINEATED DURING AUGUST OF 2012 BY CHRISTOPHER K. DANFORTH OF TFMORAN, INC. CWS #077. THE WETLANDS WERE DELINEATED ACCORDING TO THE 1987 ARMY CORPS OF ENGINEERS WETLANDS DELINEATION MANUAL AND THE INTERIM REGIONAL SUPPLEMENT NE REGIONAL.

DOMINANT HYDRIC SOIL CONDITIONS WITHIN THE WETLANDS WERE IDENTIFIED UTILIZING THE CRITERIA OF "FIELD INDICATORS FOR IDENTIFYING HYDRIC SOILS IN NEW ENGLAND", VERSION 3, APRIL 2004.

DOMINANCE OF WETLAND VEGETATION WAS ASSESSED UTILIZING THE "NATIONAL LIST OF PLANT SPECIES THAT OCCUR IN WETLANDS: 1988 NORTHEAST" (REGION 1) (PORTER B. REED, JR.) THE AREA SURVEYED FOR WETLANDS INCLUDES LANDS ADACENT TO THE GRAVEL ROAD, THE EXISTING GRAVEL PIT, AND THE LAND BETWEEN THE OPEN AREA AND THE ISINGLASS RIVER. CONTIGUOUS AND ISOLATED POCKET WETLANDS WERE DELINEATED WITHIN THE 250 FOOT SHORELAND PROTECTION BUFFER TO THE ISINGLASS RIVER THAT ARE NOT DEPICTED HEREON.

TAX MAP 210 LOT 57

PHASE 2 GRADING PLAN

GRAVEL EXCAVATION OPERATION

GREEN HILL ROAD, BARRINGTON, NH

OWNED BY

TRINITY CONSERVATION, LLC

PREPARED FOR

TRINITY CONSERVATION, LLC

SCALE: 1"=100' **SEPTEMBER 20, 2012**

TFM
Civil Engineers
Structural Engineers
Traffic Engineers
Land Surveyors
Landscape Architects
Scientists

48 Constitution Drive
Bedford, NH 03110
Phone (603) 472-4488
Fax (603) 472-9747
www.tfmoran.com

FILE	47052.00	DR	JH	FB	–	SHEET 7 OF 12
		CK	JK	CADFILE	47052-00 Site	

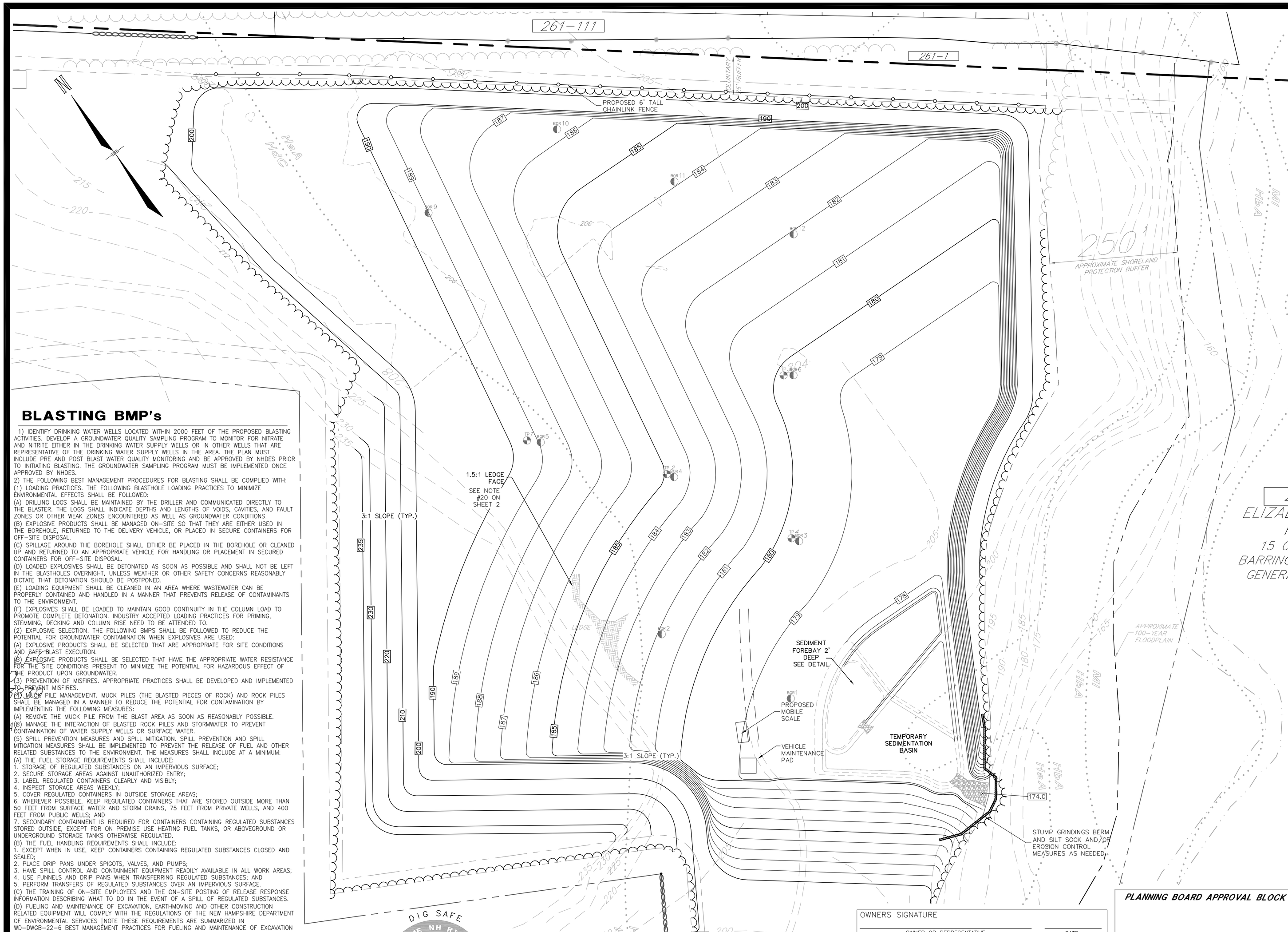

NOTES

1. THE PURPOSE OF THIS PLAN IS TO SHOW THE OVERALL EXCAVATION AND RESTORATION OF THE SITE.
2. TOPOGRAPHY SHOWN IS A COMPILATION OF GROUND SURVEY BY THIS OFFICE AND INFORMATION TAKEN FROM THE REFERENCE PLAN. GROUND SURVEY DATUM IS NAD 88 COORS.
3. WRITTEN DIMENSIONS HAVE PRECEDENCE OVER SCALED DIMENSIONS. THE CONTRACTOR SHALL USE CAUTION WHEN SCALING REPRODUCED PLANS. IN CASE OF CONFLICT BETWEEN THIS PLAN SET AND ANY OTHER DRAWING AND/OR SPECIFICATION, THE ENGINEER SHALL BE NOTIFIED IMMEDIATELY FOR CLARIFICATIONS.
4. THE CONTRACTOR IS RESPONSIBLE FOR THE MEANS AND METHODS OF CONSTRUCTION AND FOR CONDITIONS AT THE SITE. THESE PLANS, PREPARED BY TFMORAN, INC., DO NOT EXTEND TO OR INCLUDE SYSTEMS PERTAINING TO THE SAFETY OF THE CONSTRUCTION CONTRACTOR OR THEIR EMPLOYEES, AGENTS OR REPRESENTATIVES IN THE PERFORMANCE OF THE WORK. THE SEAL OF THE SURVEYOR OR ENGINEER HEREON DOES NOT EXTEND TO ANY SUCH SAFETY SYSTEMS THAT MAY NOW OR HEREAFTER BE INCORPORATED INTO THESE PLANS. THE CONSTRUCTION CONTRACTOR SHALL PREPARE OR OBTAIN THE APPROPRIATE SAFETY SYSTEMS WHICH MAY BE REQUIRED BY THE U.S. OCCUPATIONAL SAFETY AND HEALTH ADMINISTRATION (OSHA) AND/OR LOCAL REGULATIONS.
5. IT SHALL BE THE CONTRACTOR'S RESPONSIBILITY TO FAMILIARIZE HIMSELF WITH THE SITE AND ALL EXISTING CONDITIONS SURROUNDING IT AND THEREON. THE CONTRACTOR SHALL ADVISE THE APPROPRIATE AUTHORITY OF HIS INTENTIONS AT LEAST 48 HOURS IN ADVANCE.
6. THE CONTRACTOR SHALL MAINTAIN EMERGENCY ACCESS TO ALL AREAS AFFECTED BY HIS WORK AT ALL TIMES.
7. IN THE EVENT OF A CONFLICT BETWEEN PLANS, SPECIFICATIONS, AND DETAILS, THE ENGINEER SHALL BE NOTIFIED IMMEDIATELY FOR CLARIFICATION.
8. IF CONDITIONS AT THE SITE ARE DIFFERENT THAN SHOWN ON THE PLANS, THE ENGINEER SHALL BE NOTIFIED PRIOR TO PROCEEDING WITH THE AFFECTED WORK.
9. THESE PLANS WERE PREPARED UNDER THE SUPERVISION OF A LICENSED PROFESSIONAL ENGINEER. TFMORAN INC. ASSUMES NO LIABILITY AS A RESULT OF ANY CHANGES OR NON-CONFORMANCE WITH THESE PLANS EXCEPT UPON THE WRITTEN APPROVAL OF THE ENGINEER OF RECORD.
10. TFMORAN INC. ASSUMES NO LIABILITY FOR WORK PERFORMED WITHOUT AN ACCEPTABLE PROGRAM OF TESTING AND INSPECTION AS APPROVED BY THE ENGINEER OF RECORD.
11. WARM SEASON GRASS MIX SHALL BE USED TO RECLAIM THE FLOOR OF THE EXCAVATION SITE. SPECIFICATION FOR WARM SEASON GRASS MIX IS LOCATED ON SHEET 10 OF THIS PLAN SET. EMBANKMENTS SHALL BE SEEDED WITH USDA CONSERVATION SERVICE MIX B. SPECIFICATIONS FOR CONSERVATION MIX B ARE LOCATED ON SHEET 10 OF THIS PLAN SET.
12. PERMANENT AND TEMPORARY EMBANKMENTS THAT ARE NOT ACTIVELY BEING WORKED ON SHALL BE STABILIZED WITH LOAM, SEED AND NORTH AMERICAN GREEN MATTING.
13. OPERATOR/EXCAVATOR SHALL OBSERVE WATER LEVEL IN MONITORING WELLS DURING APRIL ANNUALLY. FINAL GRADES SHALL BE AJUSTED AS NECESSARY TO PROVIDE 4 FEET (MIN.) SEPARATION ABOVE WATER TABLE.
14. WHERE LEDGE IS ENCOUNTERED AT DESIGN FINISH GRADE OPERATOR SHALL OVERBLAST AND BACKFILL TO DEISGN FINISH GRADES USING OVERBURDEN AND/OR OTHER MATERIAL DETERMINED BY ENGINEER.

LEGEND

PROPOSED		EXISTING
	IRON PIPE	IPF
	IRON PIN	IPinF or IRF
	DRILL HOLE	DHF
	EDGE OF PAVEMENT	
	EDGE OF GRAVEL	
	SILT SOCK/STUMP GRINDINGS BERM	
	SIGN	
	UTILITY POLE	
	TESTPIT	TP
×201.5	SPOT GRADE	×200.5
200	INDEX CONTOUR	200
202	INTERMEDIATE CONTOUR	202
	EDGE OF WETLAND	E.O.W.
	BROOK, STREAM OR RIVER	
	S.C.S. SOILS BOUNDARY	HdC
	TREELINE	
	RIP-RAP	

WETLAND CERTIFICATION

WETLANDS SHOWN ON THIS PLAN WERE DELINEATED DURING AUGUST OF 2012 BY CHRISTOPHER K. DANFORTH OF TFMORAN, INC. CWS #277. THE WETLANDS WERE DELINEATED ACCORDING TO THE 1987 ARMY CORPS OF ENGINEERS WETLANDS DELINEATION MANUAL AND THE INTERIM REGIONAL SUPPLEMENT NE REGIONAL.

DOMINANT HYDRIC SOIL CONDITIONS WITHIN THE WETLANDS WERE IDENTIFIED UTILIZING THE CRITERIA OF "FIELD INDICATORS FOR IDENTIFYING HYDRIC SOILS IN NEW ENGLAND", VERSION 3, APRIL 2004.

DOMINANCE OF WETLAND VEGETATION WAS ASSESSED UTILIZING THE "NATIONAL LIST OF PLANT SPECIES THAT OCCUR IN WETLANDS: 1988 NORTHEAST" (REGION 1) (PORTER B. REED, JR.) THE AREA SURVEYED FOR WETLANDS INCLUDES LANDS ADACENT TO THE GRAVEL ROAD, THE EXISTING GRAVEL PIT, AND THE LAND BETWEEN THE OPEN AREA AND THE ISINGLASS RIVER. CONTIGUOUS AND ISOLATED POCKET WETLANDS WERE DELINEATED WITHIN THE 250 FOOT SHORELAND PROTECTION BUFFER TO THE ISINGLASS RIVER THAT ARE NOT DEPICTED HEREON.

NHD. DITT

BLASTING BMP's

1) IDENTIFY DRINKING WATER WELLS LOCATED WITHIN 2000 FEET OF THE PROPOSED BLASTING ACTIVITIES. DEVELOP A GROUNDWATER QUALITY SAMPLING PROGRAM TO MONITOR FOR NITRATE AND NITRITE EITHER IN THE DRINKING WATER SUPPLY WELLS OR IN OTHER WELLS THAT ARE REPRESENTATIVE OF THE DRINKING WATER SUPPLY WELLS IN THE AREA. THE PLAN MUST INCLUDE PRE AND POST BLAST WATER QUALITY MONITORING AND BE APPROVED BY NHDES PRIOR TO INITIATING BLASTING. THE GROUNDWATER SAMPLING PROGRAM MUST BE IMPLEMENTED ONCE APPROVED BY NHDES.
2) THE FOLLOWING BEST MANAGEMENT PROCEDURES FOR BLASTING SHALL BE COMPLIED WITH:
(1) LOADING PRACTICES. THE FOLLOWING BLASTHOLE LOADING PRACTICES TO MINIMIZE ENVIRONMENTAL EFFECTS SHALL BE FOLLOWED:
(A) DRILLING LOGS SHALL BE MAINTAINED BY THE DRILLER AND COMMUNICATED DIRECTLY TO THE BLASTER. THE LOGS SHALL INDICATE DEPTHS AND LENGTHS OF VOIDS, CAVITIES, AND FAULT ZONES OR OTHER WEAK ZONES ENCOUNTERED AS WELL AS GROUNDWATER CONDITIONS.
(B) EXPLOSIVE PRODUCTS SHALL BE MANAGED ON-SITE SO THAT THEY ARE EITHER USED IN THE BOREHOLE, RETURNED TO THE DELIVERY VEHICLE, OR PLACED IN SECURE CONTAINERS FOR OFF-SITE DISPOSAL.
(C) SPILLAGE AROUND THE BOREHOLE SHALL EITHER BE PLACED IN THE BOREHOLE OR CLEANED UP AND RETURNED TO AN APPROPRIATE VEHICLE FOR HANDLING OR PLACEMENT IN SECURED CONTAINERS FOR OFF-SITE DISPOSAL.
(D) LOADED EXPLOSIVES SHALL BE DETONATED AS SOON AS POSSIBLE AND SHALL NOT BE LEFT IN THE BLASTHOLES OVERNIGHT, UNLESS WEATHER OR OTHER SAFETY CONCERNS REASONABLY DICTATE THAT DETONATION SHOULD BE POSTPONED.
(E) LOADING EQUIPMENT SHALL BE CLEANED IN AN AREA WHERE WASTEWATER CAN BE PROPERLY CONTAINED AND HANDLED IN A MANNER THAT PREVENTS RELEASE OF CONTAMINANTS TO THE ENVIRONMENT.
(F) EXPLOSIVES SHALL BE LOADED TO MAINTAIN GOOD CONTINUITY IN THE COLUMN LOAD TO PROMOTE COMPLETE DETONATION. INDUSTRY ACCEPTED LOADING PRACTICES FOR PRIMING, STEMMING, DECKING AND COLUMN RISE NEED TO BE ATTENDED TO.
(2) EXPLOSIVE SELECTION. THE FOLLOWING BMPS SHALL BE FOLLOWED TO REDUCE THE POTENTIAL FOR GROUNDWATER CONTAMINATION WHEN EXPLOSIVES ARE USED:
(A) EXPLOSIVE PRODUCTS SHALL BE SELECTED THAT ARE APPROPRIATE FOR SITE CONDITIONS AND SAFE BLAST EXECUTION.
(B) EXPLOSIVE PRODUCTS SHALL BE SELECTED THAT HAVE THE APPROPRIATE WATER RESISTANCE FOR THE SITE CONDITIONS PRESENT TO MINIMIZE THE POTENTIAL FOR HAZARDOUS EFFECT OF THE PRODUCT UPON GROUNDWATER.
(3) PREVENTION OF MISFIRES. APPROPRIATE PRACTICES SHALL BE DEVELOPED AND IMPLEMENTED TO PREVENT MISFIRES.
(4) MUCK PILE MANAGEMENT. MUCK PILES (THE BLASTED PIECES OF ROCK) AND ROCK PILES SHALL BE MANAGED IN A MANNER TO REDUCE THE POTENTIAL FOR CONTAMINATION BY IMPLEMENTING THE FOLLOWING MEASURES:
(A) REMOVE THE MUCK PILE FROM THE BLAST AREA AS SOON AS REASONABLY POSSIBLE.
(B) MANAGE THE INTERACTION OF BLASTED ROCK PILES AND STORMWATER TO PREVENT CONTAMINATION OF WATER SUPPLY WELLS OR SURFACE WATER.
(5) SPILL PREVENTION MEASURES AND SPILL MITIGATION. SPILL PREVENTION AND SPILL MITIGATION MEASURES SHALL BE IMPLEMENTED TO PREVENT THE RELEASE OF FUEL AND OTHER RELATED SUBSTANCES TO THE ENVIRONMENT. THE MEASURES SHALL INCLUDE AT A MINIMUM:
(A) THE FUEL STORAGE REQUIREMENTS SHALL INCLUDE:
1. STORAGE OF REGULATED SUBSTANCES ON AN IMPERVIOUS SURFACE;
2. SECURE STORAGE AREAS AGAINST UNAUTHORIZED ENTRY;
3. LABEL REGULATED CONTAINERS CLEARLY AND VISIBLY;
4. INSPECT STORAGE AREAS WEEKLY;
5. COVER REGULATED CONTAINERS IN OUTSIDE STORAGE AREAS;
6. WHEREVER POSSIBLE, KEEP REGULATED CONTAINERS THAT ARE STORED OUTSIDE MORE THAN 50 FEET FROM SURFACE WATER AND STORM DRAINS, 75 FEET FROM PRIVATE WELLS, AND 400 FEET FROM PUBLIC WELLS; AND
7. SECONDARY CONTAINMENT IS REQUIRED FOR CONTAINERS CONTAINING REGULATED SUBSTANCES STORED OUTSIDE, EXCEPT FOR ON PREMISE USE HEATING FUEL TANKS, OR ABOVEGROUND OR UNDERGROUND STORAGE TANKS OTHERWISE REGULATED.
(B) THE FUEL HANDLING REQUIREMENTS SHALL INCLUDE:
1. EXCEPT WHEN IN USE, KEEP CONTAINERS CONTAINING REGULATED SUBSTANCES CLOSED AND SEALED;
2. PLACE DRIP PANS UNDER SPIGOTS, VALVES, AND PUMPS;
3. HAVE SPILL CONTROL AND CONTAINMENT EQUIPMENT READILY AVAILABLE IN ALL WORK AREAS;
4. USE FUNNELS AND DRIP PANS WHEN TRANSFERRING REGULATED SUBSTANCES; AND
5. PERFORM TRANSFERS OF REGULATED SUBSTANCES OVER AN IMPERVIOUS SURFACE.
(C) THE TRAINING OF ON-SITE EMPLOYEES AND THE ON-SITE POSTING OF RELEASE RESPONSE INFORMATION DESCRIBING WHAT TO DO IN THE EVENT OF A SPILL OF REGULATED SUBSTANCES.
(D) FUELING AND MAINTENANCE OF EXCAVATION, EARTHMOVING AND OTHER CONSTRUCTION RELATED EQUIPMENT WILL COMPLY WITH THE REGULATIONS OF THE NEW HAMPSHIRE DEPARTMENT OF ENVIRONMENTAL SERVICES [NOTE THESE REQUIREMENTS ARE SUMMARIZED IN WD-DWGB-22-6 BEST MANAGEMENT PRACTICES FOR FUELING AND MAINTENANCE OF EXCAVATION AND EARTHMOVING EQUIPMENT" OR ITS SUCCESSOR DOCUMENT. (SEE HTTP://DES.NH.GOV/ORGANIZATION/COMMISSIONER/PIP/FACTSHEETS/DWGB/DOCUMENTS/DWGB-22-6.PDF)

Copyright 2012 ©Thomas F. Moran, Inc.
48 Constitution Drive, Bedford, N.H. 03110

All rights reserved. These plans and materials may not be copied, duplicated, replicated or otherwise reproduced in any form whatsoever without the prior written permission of Thomas F. Moran, Inc.

This plan is not effective unless signed by a duly authorized officer of Thomas F. Moran, Inc.

100 50 25 0 100
Graphic Scale in Feet

DIG SAFE
MA ME NH RI VT
CALL 1-888-DIG-SAFE TOLL FREE
UTILITIES UNDERGROUND PLANT DAMAGE PREVENTION SYSTEM
CONTACT DIG SAFE 72 HOURS PRIOR TO CONSTRUCTION

PHASING NOTE

THE GRAVEL EXCAVATION OPERATION WILL BE PERFORMED SO AS TO ONLY DISTURB 10 ACRES AT A TIME. THE AREA COMPLETED WILL BE STABILIZED WITH GRASS PRIOR TO CLEARING, GRUBBING AND EXCAVATING THE NEXT PHASE AREA. AREAS SHOWN ARE AN EXAMPLE OF POSSIBLE PHASING, BUT THE OPERATOR MAY VARY PHASING SEQUENCE (WHILE ONLY DISTURBING 10 ACRES AT ANY GIVEN TIME).

THE OPERATOR SHALL UPGRADE THE ENTRANCE DRIVEWAY AS SHOWN PRIOR TO BEGINNING THE GRAVEL EXCAVATION OPERATION, THEN BEGIN THE OPERATION IN THE EXISTING OPEN AREA (PHASE 1). A SEDIMENTATION BASIN OR OTHER DRAINAGE SYSTEM SHALL BE PROVIDED TO TREAT RUNOFF PRIOR TO LEAVING THE PROJECT AREA.

OWNERS SIGNATURE

OWNER OR REPRESENTATIVE DATE

REV.	DATE	DESCRIPTION	DR	CK
4	02/15/13	PER DUBOIS & KING REVIEW	JH	JK
3	01/17/13	PER DUBOIS & KING REVIEW	JH	JK
1	12/10/12	ADD 75 FT. BUFFER NORTH	JH	JK

PLANNING BOARD APPROVAL BLOCK

TAX MAP 210 LOT 57

FINAL EXCAVATION AND RESTORATION PLAN

GRAVEL EXCAVATION OPERATION

GREEN HILL ROAD, BARRINGTON, NH

OWNED BY

TRINITY CONSERVATION, LLC

PREPARED FOR

TRINITY CONSERVATION, LLC

SCALE: 1"=100' **SEPTEMBER 20, 2012**

TFM®
Civil Engineers
Structural Engineers
Traffic Engineers
Land Surveyors
Landscape Architects
Scientists

48 Constitution Drive
Bedford, NH 03110
Phone (603) 472-4488
Fax (603) 472-9747
www.tfmoran.com

FILE	47052.00	DR	JH	FB	–	SHEET 8 OF 12
		CK	JK	CADFILE	47052-00 Site	

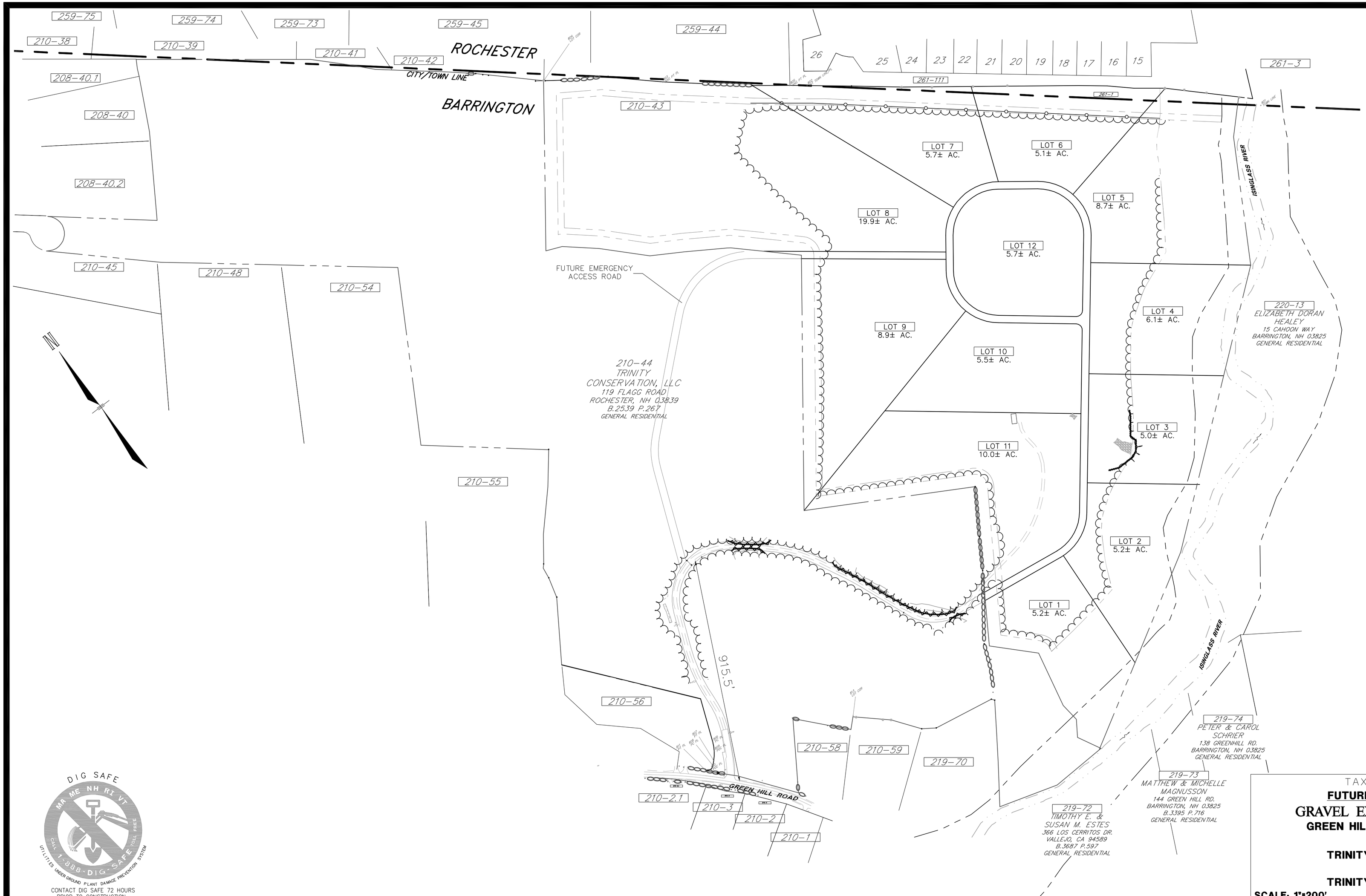

NOTES

1. THE PURPOSE OF THIS PLAN IS TO SHOW A POTENTIAL FUTURE RESIDENTIAL DEVELOPMENT.
2. CURRENT ZONING IS GENERAL RESIDENTIAL (GR) DISTRICT AND GROUNDWATER PROTECTION DISTRICT OVERLAY (STRATIFIED DRIFT AQUIFER AREA)

	REQUIRED
MIN. LOT SIZE:	80,000 S.F.
MIN. LOT FRONTAGE:	200'
MIN. BUILDING SETBACKS:	
FRONT	40'
SIDE	30'
REAR	30'
MAX. BUILDING HEIGHT:	35' (2-1/2 STORIES)
MAX. LOT COVERAGE:	40%

TAX MAP 210 LOT 57

FUTURE DEVELOPMENT PLAN

GRAVEL EXCAVATION OPERATION

GREEN HILL ROAD, BARRINGTON, NH

OWNED BY

TRINITY CONSERVATION, LLC

PREPARED FOR

TRINITY CONSERVATION, LLC

SCALE: 1"=200' **SEPTEMBER 20, 2012**

DIG SAFE
MA ME NH RI VT
CALL 1-888-DIG-SAFE TOLL FREE
UTILITIES UNDERGROUND PLANT DAMAGE PREVENTION SYSTEM
CONTACT DIG SAFE 72 HOURS PRIOR TO CONSTRUCTION

Copyright 2012 ©Thomas F. Moran, Inc.
48 Constitution Drive, Bedford, N.H. 03110

All rights reserved. These plans and materials may not be copied, duplicated, replicated or otherwise reproduced in any form whatsoever without the prior written permission of Thomas F. Moran, Inc.

This plan is not effective unless signed by a duly authorized officer of Thomas F. Moran, Inc.

200 100 50 0 200
Graphic Scale in Feet

REV.	DATE	DESCRIPTION	DR	CK
3	01/17/13	PER DUBOIS & KING REVIEW	JH	JK

TFM
Civil Engineers
Structural Engineers
Traffic Engineers
Land Surveyors
Landscape Architects
Scientists

48 Constitution Drive
Bedford, NH 03110
Phone (603) 472-4488
Fax (603) 472-9747
www.tfmoran.com

FILE	47052.00	DR	JH	FB	–	SHEET 9 OF 12
		CK	JK	CADFILE	47052-00 Site	

CONSTRUCTION SEQUENCE NOTES

1. ALL PROPERTY CORNERS SHALL BE STAKED OR CLEARLY MARKED WITH GRADE STAKES OR FLAGGING BY A LAND SURVEYOR. PROPERTY LINES AND BUFFERS NEAR THE OPERATION SHALL BE CLEARLY MARKED AT REASONABLE INTERVALSTO PREVENT ENCROACHMENT ON ABUTTING PROPERTIES.
2. WHERE NECESSARY FOR EXCAVATION CUT AND CLEAR TREES, DISPOSE OF ALL DEBRIS. STUMPS ARE TO BE BURIED IN THE EMBANKMENT IN THE STUMP DISPOSAL AREA.
3. CONSTRUCT TEMPORARY SEDIMENT AND EROSION CONTROL MEASURES.
4. EXCAVATE MATERIAL. NO MORE THAN 10 ACRES OF AREA MAY BE EXPOSED AT ANY ONE TIME.
5. BEGIN PERMANENTAND TEMPORARY SEEDING AND MULCHING. ALL CUT SLOPES SHALL BE SEEDED AND MULCHED IMMEDIATELY AFTER THE EXCAVATION IS COMLETED.
6. DAILY, OR AS REQUIRED CONSTRUCT TEMPORARY BERMS, BASINS, DITCHES, SILT FENCES, SEDIMENET TRAPS, ETC.MULCH AND SEED AS REQUIRED.
7. INSPECT AND MAINTAIN ALL EROSION AND SEDIMENT CONTROL MEASURES.
8. COMPLETE PERMANENT SEEDING, LANDSCAPING AND OTHER RESORATION MEASURES.
9. REMOVE TEMPORARY EROSION CONTROL MEASURES.
10. FUGITIVE DUST SHALL BE CONTROLLED IN ACCORDANCE WITH NHDES REGULATIONS.

GENERAL NOTES

1. ALL IN PAVEMENT MANHOLES SHALL HAVE RIMS SET TO FINISH GRADE REGARDLESS OF ANY ELEVATIONS OTHERWISE SHOWN.
2. WHERE DEPTH OF COVER IS LESS THAN 3 FEET CLASS V REINFORCED CONCRETE PIPE SHALL BE USED.
3. THE CONTRACTOR SHALL CONTACT ALL UTILITY COMPANIES OWNING UTILITIES, EITHER OVERHEAD OR UNDERGROUND, WITHIN THE CONSTRUCTION AREA AND SHALL COORDINATE AS NECESSARY WITH THE UTILITY COMPANIES OF SAID UTILITIES. THE PROTECTION OR RELOCATION OF UTILITIES IS ULTIMATELY THE RESPONSIBILITY OF THE CONTRACTOR.
4. THE CONTRACTOR SHALL MAINTAIN EMERGENCY ACCESS TO ALL AREAS AFFECTED BY HIS WORK AT ALL TIMES.
5. ALL EXCAVATIONS SHALL BE THOROUGHLY SECURED ON A DAILY BASIS BY THE CONTRACTOR AT THE COMPLETION OF CONSTRUCTION OPERATIONS IN THE IMMEDIATE AREA.
6. EROSION CONTROL SYSTEMS SHALL BE INSTALLED AND MAINTAINED FOR THE DURATION OF THE PROJECT IN ACCORDANCE WITH APPLICABLE NHDES STANDARDS. THESE DETAILS SERVE AS A GUIDE ONLY.
7. REFER TO THE TOWN STANDARD DETAILS, LATEST REVISION, FOR ADDITIONAL INFORMATION AND CRITERIA.
8. THE CONTRACTOR SHALL STABILIZE ALL DITCHES, SWALES, AND PONDS PRIOR TO DIRECTING FLOW TO THEM.
9. THE SMALLEST PRACTICAL AREA SHALL BE DISTURBED DURING CONSTRUCTION, BUT IN NO CASE SHALL EXCEED 10 ACRES AT ANY ONE TIME BEFORE DISTURBED AREAS ARE STABILIZED.

EROSION CONTROL NOTES

DURING CONSTRUCTION AND THEREAFTER, EROSION CONTROL MEASURES ARE TO BE IMPLEMENTED AS NOTED:

1. INSTALLATION OF SILTATION FENCES AND OTHER EROSION CONTROL MEASURES SHALL BE COMPLETED PRIOR TO THE START OF SITE WORK IN ANY GIVEN AREA. PREFABRICATED SILTATION FENCES SHALL BE INSTALLED ACCORDING TO THE MANUFACTURER'S RECOMMENDATIONS.
2. SILTATION FENCES AND OTHER EROSION CONTROL MEASURES SHALL BE KEPT CLEAN DURING CONSTRUCTION AND REMOVED WHEN ALL SLOPES HAVE A VEGETATIVE COVER OF GREATER THAN 85%. EROSION CONTROL MEASURES SHALL BE INSPECTED ON A WEEKLY BASIS AND AFTER EVERY RAINFALL.
3. EXISTING VEGETATION IS TO REMAIN UNDISTURBED WHEREVER POSSIBLE.
4. THE AREA OF LAND EXPOSED AND THE TIME OF EXPOSURE SHALL BE MINIMIZED. ALL DISTURBED AREAS SHALL BE STABILIZED WITHIN 72 HOURS AFTER FINAL GRADING.
5. ALL DISTURBED AREAS SHALL HAVE A MINIMUM OF 4" OF LOAM. ACCEPTABLE SEED MIXES ARE AS FOLLOWS:

   EMBANKMENTS: USE USDA SOIL CONSERVATION SERVICE "B" MIXTURE, TO BE SPREAD UNIFORMLY BY HYDRO SEEDING.

   TALL FESCUE 0.36 LBS/ 1000 SF
   CREEPING RED FESCUE0.25 LBS/1000 SF
   CROWN VETCH 0.35 LBS/ 1000 SF
   RYE GRASS (PERENNIAL) 0.11 LBS/ 1000 SF

   TOTAL 1.05 LBS/ 1000 SF

   EXCAVATION SITE FLOOR: WARM SEASON GRASSES

   SWITCHGRASS OR COASTAL PANICGRASS 5 LBS/ AC
   BIG BLUESTEM 7 LBS/ AC
   LITTLE BLUESTEM 6 LBS/ AC
   INDIANGRASS 7 LBS/ AC
   SIDEOATS GRAMA 2 LBS/ AC
   DEERTONGUE 8 LBS/ AC
   SAND BLUEGRASS 2 LBS/ AC

   TOTAL 37 LBS/AC

   A. PLACING LOAM ON SITE
      a. ALL SUBGRADE ELEVATIONS SHOULD BE UNIFORMLY GRADED TO RECEIVE LOAM AND SHALL BE INSPECTED AND APPROVED BY THE GENERAL CONTRACTOR PRIOR TO PLACEMENT OF LOAM.
      b. PLACE LOAM TO FORM A MINIMUM DEPTH OF 4" WHEN ROLLED, UNLESS OTHERWISE INDICATED.
      c. ALL DEPRESSIONS EXPOSED DURING THE ROLLING SHALL BE FILLED WITH ADDITIONAL LOAM.

   B. SEED BED PREPARATION
      AFTER FINISH GRADING AND JUST BEFORE SEEDING, THE AREAS TO BE SEEDED SHALL BE LOOSENED TO PROVIDE A ROUGH, FIRM BUT FINELY PULVERIZED SEEDBED. THE INTENT IS A TEXTURE CAPABLE OF RETAINING WATER, SEED AND FERTILIZER WHILE REMAINING STABLE AND ALLOWING SEED TIME TO GERMINATE. SEED SHALL BE APPLIED TO THE CONDITIONED SEEDBED NOT MORE THAN 48 HOURS AFTER THE SEEDBED HAS BEEN PREPARED.

6. LIME AND FERTILIZER SHALL BE INCORPORATED INTO THE SOIL PRIOR TO OR AT THE TIME OF AT THE TIME OF SEEDING. A MINIMUM OF 2 TONS PER ACRE OF AGRICULTURAL LIMESTONE AND 500 LBS. PER ACRE OF 10-20-20 FERTILIZER SHALL BE APPLIED. SEEDING PRACTICES SHALL COMPLY WITH LOCAL USDA SOIL CONSERVATION SERVICES RECOMMENDATIONS.
7. HAY MULCH OR JUTE MATTING SHALL BE USED WHERE INDICATED ON THE PLANS. A MINIMUM OF 1.5 TONS OF MULCH PER ACRE SHALL BE APPLIED. MULCH SHALL BE ANCHORED IN PLACE WHERE NECESSARY. JUTE MATTING SHALL BE LAID IN THE DIRECTION OF RUNOFF FLOW AND APPLIED IN ACCORDANCE WITH MANUFACTURER'S INSTRUCTIONS.
8. PERMANENT OR TEMPORARY COVER MUST BE IN PLACE BEFORE THE GROWING SEASON ENDS. WHEN SEEDED AREAS ARE MULCHED, PLANTINGS MAY BE MADE FROM EARLY SPRING TO EARLY OCTOBER. WHEN SEEDED AREAS AREA NOT MULCHED, PLANTINGS SHOULD BE MADE FROM EARLY SPRING TO MAY 20 OR FROM AUGUST 15 TO SEPTEMBER 15. NO DISTURBED AREA SHALL BE LEFT EXPOSED DURING WINTER MONTHS.
9. WATER SHALL BE USED FOR DUST CONTROL IN APPROPRIATE AREAS.

Copyright 2012 ©Thomas F. Moran, Inc.
48 Constitution Drive, Bedford, N.H. 03110

All rights reserved. These plans and materials may not be copied, duplicated, replicated or otherwise reproduced in any form whatsoever without the prior written permission of Thomas F. Moran, Inc.

This plan is not effective unless signed by a duly authorized officer of Thomas F. Moran, Inc.

WINTER CONSTRUCTION

IN ADDITION TO THE OTHER NOTES CONTAINED ON THIS PLAN, THE FOLLOWING MUST BE IMPLEMENTED:

1. WINTER EXCAVATION AND EARTHWORK SHALL BE COMPLETED AS SUCH THAT NO MORE THAN 1 ACRE OF THE SITE IS WITHOUT STABILIZATION AT ANY ONE TIME.
2. AN AREA WITHIN 100 FEET OF A PROTECTED NATURAL RESOURCE MUST BE PROTECTED WITH A DOUBLE ROW OF SEDIMENT BARRIER.
3. TEMPORARY MULCH MUST BE APPLIED WITHIN 7 DAYS OF SOIL EXPOSURE OR PRIOR TO ANY STORM EVENT, BUT AFTER EVERY WORKDAY IN AREAS WITHIN 100 FEET FROM A PROTECTED NATURAL RESOURCE.
4. AREAS THAT HAVE BEEN BROUGHT TO FINAL GRADE MUST BE PERMANENTLY MULCHED THE SAME DAY.
5. IN THE EVENT OF A SNOWFALL GREATER THAN 1 INCH (FRESH OR CUMULATIVE), THE SNOW SHALL BE REMOVED FROM THE AREAS DUE TO BE SEEDED AND MULCHED.
6. LOAM SHALL BE FREE OF FROZEN CLUMPS BEFORE IT IS APPLIED.
7. A DITCH THAT WILL BE CONSTRUCTED DURING THE WINTER MUST BE STABILIZED WITH RIPRAP.

OVERWINTER STABILIZATION

1. PERMANENT STABILIZATION CONSISTS OF AT LEAST 85% VEGETATION, PAVEMENT/GRAVEL BASE OR RIPRAP.
2. DO NOT EXPOSE SLOPES OR LEAVE SLOPES EXPOSED OVER THE WINTER OR FOR ANY OTHER EXTENDED TIME OF WORK SUSPENSION UNLESS FULLY PROTECTED WITH MULCH.
3. APPLY HAY MULCH AT TWICE THE STANDARD RATE (150 LBS. PER 1,000 SF). THE MULCH MUST BE THICK ENOUGH SUCH THAT THE GROUND SURFACE WILL NOT BE VISIBLE AND MUST BE ANCHORED.
4. USE MULCH AND MULCH NETTING OR AN EROSION CONTROL MULCH BLANKET OR MIX FOR ALL SLOPES GREATER THAN 8% OR OTHER AREAS EXPOSED TO DIRECT WIND.
5. INSTALL AN EROSION CONTROL BLANKET IN ALL DRAINAGE WAYS (BOTTOM AND SIDES) WITH A SLOPE GREATER THAN 3%.
6. SEE THE VEGETATION MEASURES FOR MORE INFORMATION ON SEEDING DATES AND TYPES.

RECLAMATION NOTES

RECLAMATION NOTES

1. ALL LOAM AND TOPSOIL TO BE STRIPPED AND STOCKPILED AND RESPREAD TO A MINIMUM DEPTH OF 4 INCHES IN THE COMPETED PIT
2. EXCEPT FOR EXPOSED ROCK LEDGE ALL AREAS WHICH HAVE BEEN AFFECTED BY THE EXCAVATION OR OTHERWISE STRIPPED OF VEGETATION SHALL BE SPREAD WITH TOPSOILS OR STRIPPIINGS IF ANY, BUT IN ANY CASE, COVERED BY SOIL CAPABLE OF SUSTAINING VEGETATION, AND SHALL BE PLANTED WITH SEEDLINGS OR GRASS SUITABLE TO PREVENT EROSION.
3. ALL EARTH AND VEGETATIVE DEBRIS RESULTING FROM THE EXCAVATION SHALL BE REMOVED OR OTHERWISE LAWFULLY DISPOSED OF.
4. ALL SLOPES, EXCEPT EXPOSED LEDGE SHALL NOT BE LEFT STEEPER THAN 2:1.
5. SEEDING:
   a. DIVERT SURFACE AND SEEPAGE WATER FROM AREA TO BE SEEDED.
   b. REMOVE LARGE STONES AND TRASH
   c. LOAM, FERTILIZER, SEED AND MULCH ARE TO BE APPLIED TO ALL SLOPES AS SOON AS POSSIBLE AFTER EXCAVATION. OTHER AREAS TO BE SEEDED BETWEEN APRIL 15 AND OCTOBER 15. THE FOLLOWING APPLICATION APPLY
      i. APPLY 4 INCHES LOAM
      ii. APPLY LIME AND FERTILIZER AS A MINIMUM APPLY THE FOLLOWING AMOUNTS PER 1000 SF
   d. SEED– EMBANKMENTS: USE USDA SOIL CONSERVATION SERVICE "B" MIXTURE, TO BE SPREAD UNIFORMLY BY HYDRO SEEDING.

   TALL FESCUE 0.36 LBS/ 1000 SF
   CREEPING RED FESCUE0.25 LBS/1000 SF
   CROWN VETCH 0.35 LBS/ 1000 SF
   RYE GRASS (PERENNIAL) 0.11 LBS/ 1000 SF

   TOTAL 1.05 LBS/ 1000 SF

   SEED– EXCAVATION SITE FLOOR: WARM SEASON GRASSES

   SWITCHGRASS OR COASTAL PANICGRASS 5 LBS/ AC
   BIG BLUESTEM 7 LBS/ AC
   LITTLE BLUESTEM 6 LBS/ AC
   INDIANGRASS 7 LBS/ AC
   SIDEOATS GRAMA 2 LBS/ AC
   DEERTONGUE 8 LBS/ AC
   SAND BLUEGRASS 2 LBS/ AC

   TOTAL 37 LBS/ AC

   MULCH– 70–90 LBS / 1000 SF OF PAPER MACHE BY MACHINE METHOD
   ANCHOR TO SLOPES USING SYNTHETIC EMULSIONS, ON SLOPES FLATTER THAN 2:1, HAY OR STRAW MAY BE USED AT THE RATE OF 70–90 LBS/1000 SF.

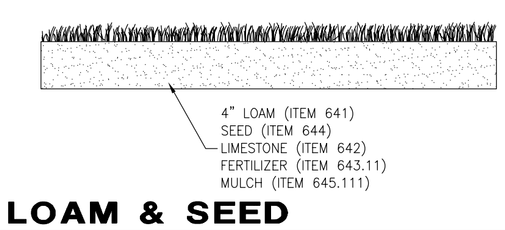

LOAM & SEED

NOT TO SCALE

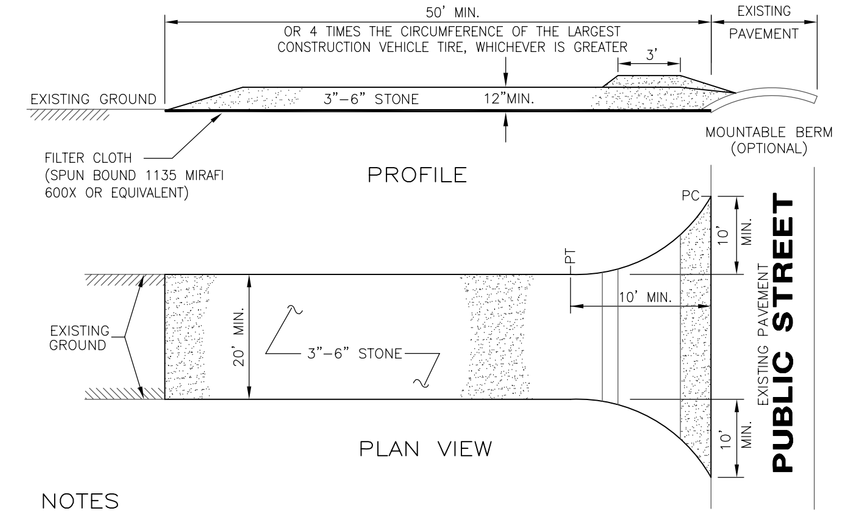

NOTES

1. FILTER CLOTH – WILL BE PLACED OVER THE ENTIRE AREA PRIOR TO PLACING OF STONE SURFACE.
2. WATER – ALL SURFACE WATER FLOWING OR DIVERTED TOWARD CONSTRUCTION ENTRANCES SHALL BE PIPED ACROSS THE ENTRANCE. IF PIPING IS IMPRACTICAL, A MOUNTABLE BERM WITH 5:1 SLOPES WILL BE PERMITTED.
3. MAINTENANCE – THE ENTRANCE SHALL BE MAINTAINED IN A CONDITION WHICH WILL PREVENT TRACKING OR FLOWING OF SEDIMENT ONTO PUBLIC RIGHTS–OF–WAY. THIS MAY REQUIRE PERIODIC TOP DRESSING WITH ADDITIONAL STONE AS CONDITIONS DEMAND AND REPAIR AND/OR CLEANOUT OF ANY MEASURES USED TO TRAP SEDIMENT. ALL SEDIMENT SPILLED, DROPPED, WASHED OR TRACKED ONTO PUBLIC RIGHTS–OF–WAY MUST BE REMOVED IMMEDIATELY.
4. WASHING – WHEELS SHALL BE CLEANED TO REMOVE SEDIMENT PRIOR TO ENTRANCE ONTO PUBLIC RIGHTS–OF–WAY. WHEN WASHING IS REQUIRED, IT SHALL BE DONE ON AN AREA STABILIZED WITH STONE AND WHICH DRAINS INTO AN APPROVED SEDIMENT TRAPPING DEVICE.
5. PERIODIC INSPECTION AND NEEDED MAINTENANCE SHALL BE PROVIDED AFTER EACH RAIN STORM EVENT.

USDA - SCS STABILIZED CONSTRUCTION ENTRANCE

SEE PLAN FOR PROPOSED LOCATION NOT TO SCALE

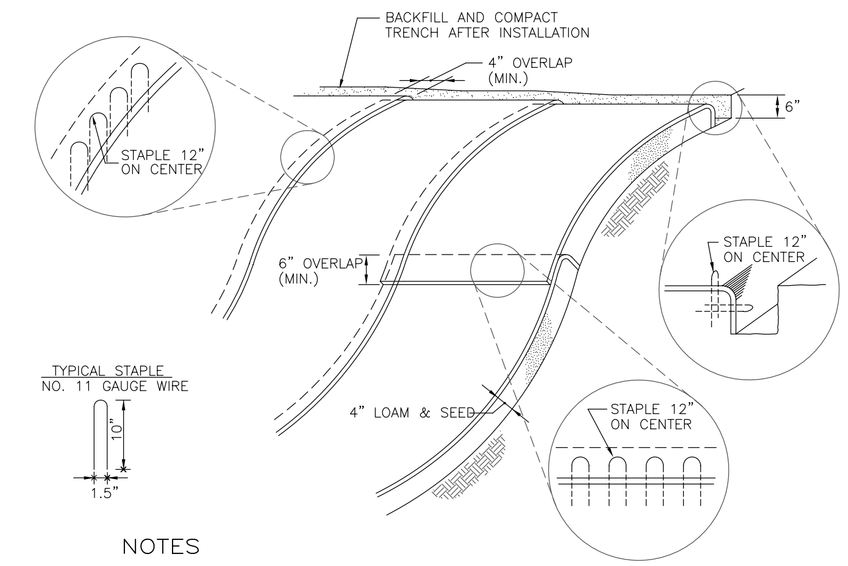

NOTES

1. BEGIN AT THE TOP OF BLANKET INSTALLATION AREA BY ANCHORING BLANKET IN A 6" DEEP TRENCH. BACKFILL AND COMPACT TRENCH AFTER STAPLING.
2. ROLL THE BLANKET DOWN THE SWALE IN THE DIRECTION OF THE WATER FLOW.
3. THE EDGES OF BLANKETS MUST BE STAPLED WITH APPROX. 4 INCH OVERLAP WHERE 2 OR MORE STRIP WIDTHS ARE REQUIRED.
4. WHEN BLANKETS MUST BE SPLICED DOWN THE SWALE, PLACE BLANKET END OVER END WITH 6 INCH (MIN.) OVERLAP AND ANCHOR DOWN SLOPE BLANKET IN A 6 INCH DEEP TRENCH.
5. BLANKET SHALL BE NORTH AMERICAN GREEN SC–150 OR APPROVED EQUAL.

BLANKET SLOPE PROTECTION

FOR EROSION CONTROL NOT TO SCALE

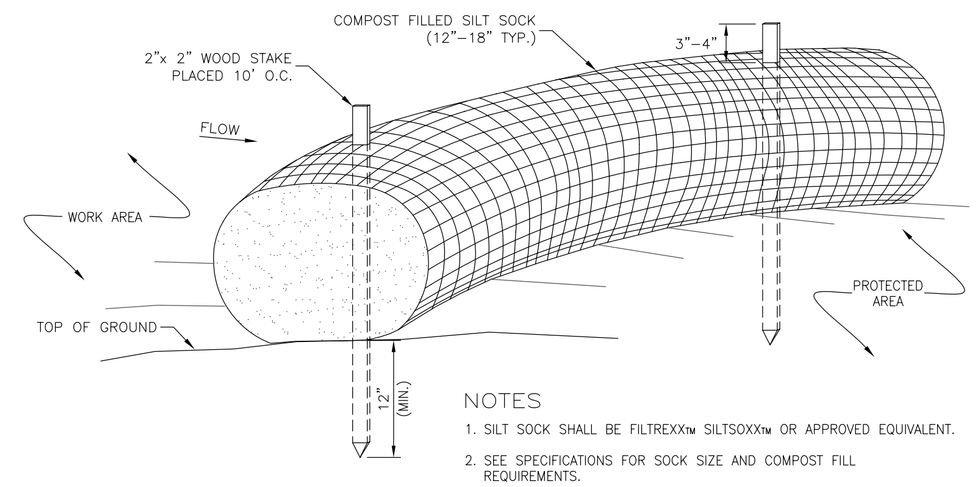

NOTES

1. SILT SOCK SHALL BE FILTREXX™ SILTSOXX™ OR APPROVED EQUIVALENT.
2. SEE SPECIFICATIONS FOR SOCK SIZE AND COMPOST FILL REQUIREMENTS.
3. SILT SOCK SHALL BE INSPECTED PERIODICALLY AND AFTER ALL STORM EVENTS, AND REPAIR OR REPLACEMENT SHALL BE PERFORMED AS NEEDED.
4. COMPOST MATERIAL SHALL BE DISPERSED ON SITE, AS DETERMINED BY THE ENGINEER.

SILT SOCK

NOT TO SCALE

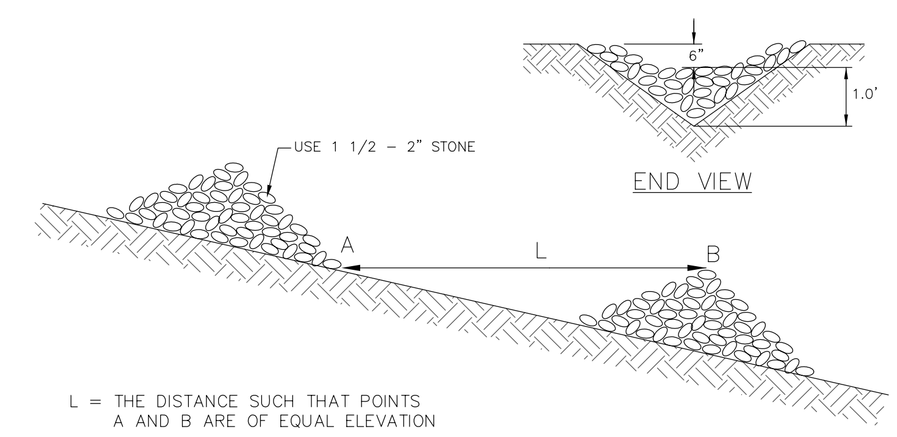

L = THE DISTANCE SUCH THAT POINTS A AND B ARE OF EQUAL ELEVATION

CHECK DAM

STONE CHECK DAM

IN SWALE NOT TO SCALE

TAX MAP 210 LOT 57

DETAIL SHEET

GRAVEL EXCAVATION OPERATION

GREEN HILL ROAD, BARRINGTON, NH

OWNED BY

TRINITY CONSERVATION, LLC

PREPARED FOR

TRINITY CONSERVATION, LLC

SCALE: AS NOTED **SEPTEMBER 20, 2012**

REV.	DATE	DESCRIPTION	DR	CK
4	02/15/13	PER DUBOIS & KING REVIEW	JH	JK
3	01/17/13	PER DUBOIS & KING REVIEW	JH	JK

TFM
Civil Engineers
Structural Engineers
Traffic Engineers
Land Surveyors
Landscape Architects
Scientists

48 Constitution Drive
Bedford, NH 03110
Phone (603) 472–4488
Fax (603) 472–9747
www.tfmoran.com

FILE	DR	FB	
47052.00	JH	–	SHEET 10 OF 12
	CK JK	CADFILE 47052–00 Details	

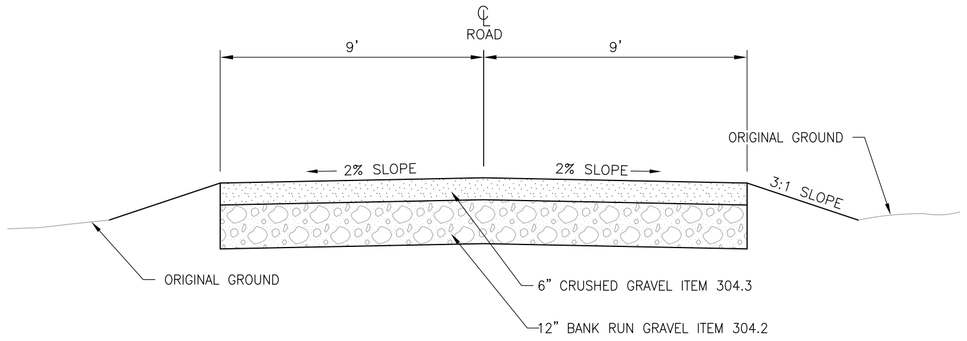

GRAVEL ACCESS ROAD

NOT TO SCALE

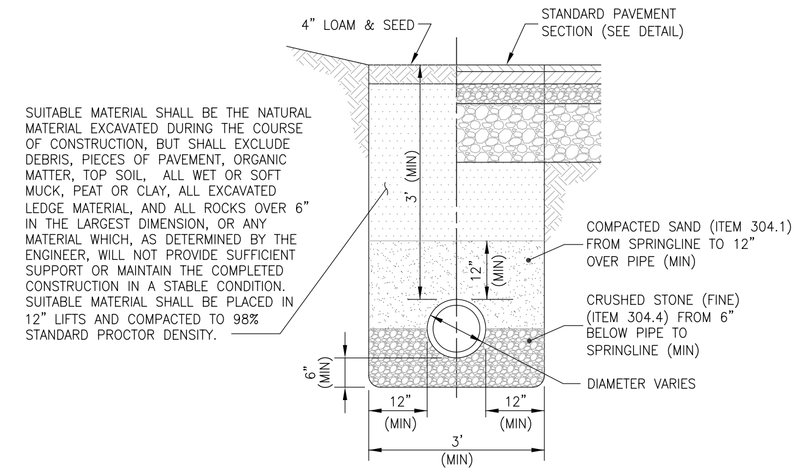

STORM DRAIN TRENCH

NOT TO SCALE

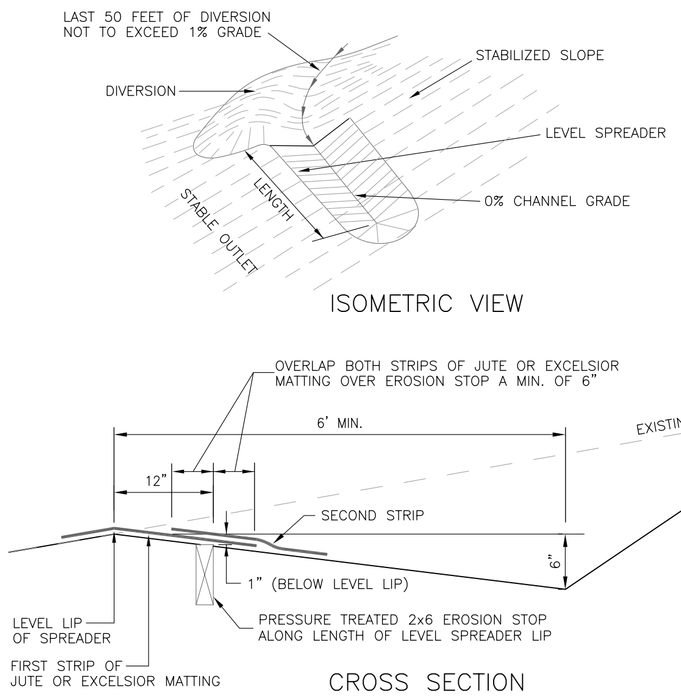

LEVEL SPREADER

NOT TO SCALE

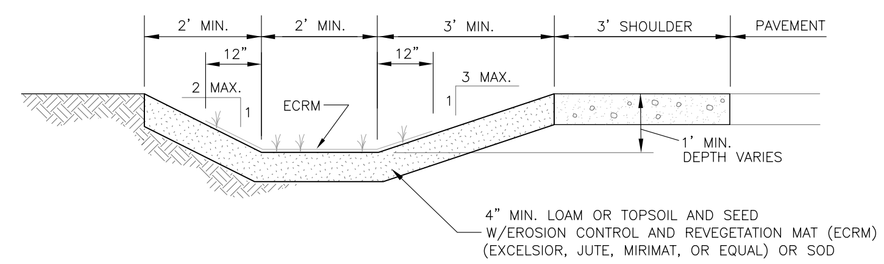

GRASS LINED SWALE

FOR USE WHERE VELOCITIES ARE 3 CFS OR LESS

NOT TO SCALE

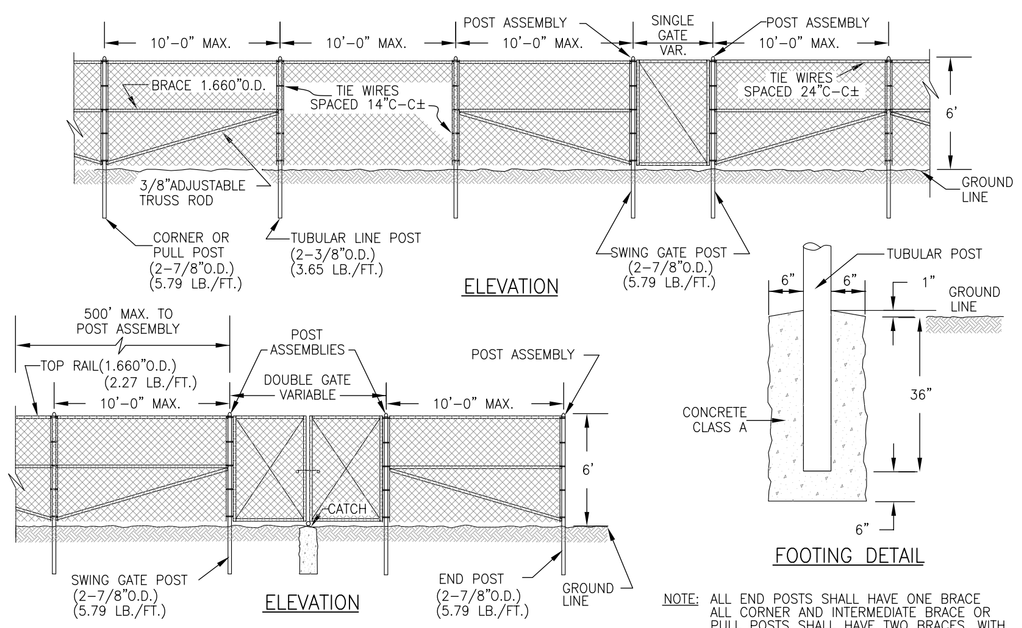

NOTE: ALL END POSTS SHALL HAVE ONE BRACE ALL CORNER AND INTERMEDIATE BRACE OR PULL POSTS SHALL HAVE TWO BRACES, WITH A MAXIMUM SPACING OF BETWEEN POST ASSEMBLIES OF 500 FEET.

CHAIN LINK FENCE DETAIL

NOT TO SCALE

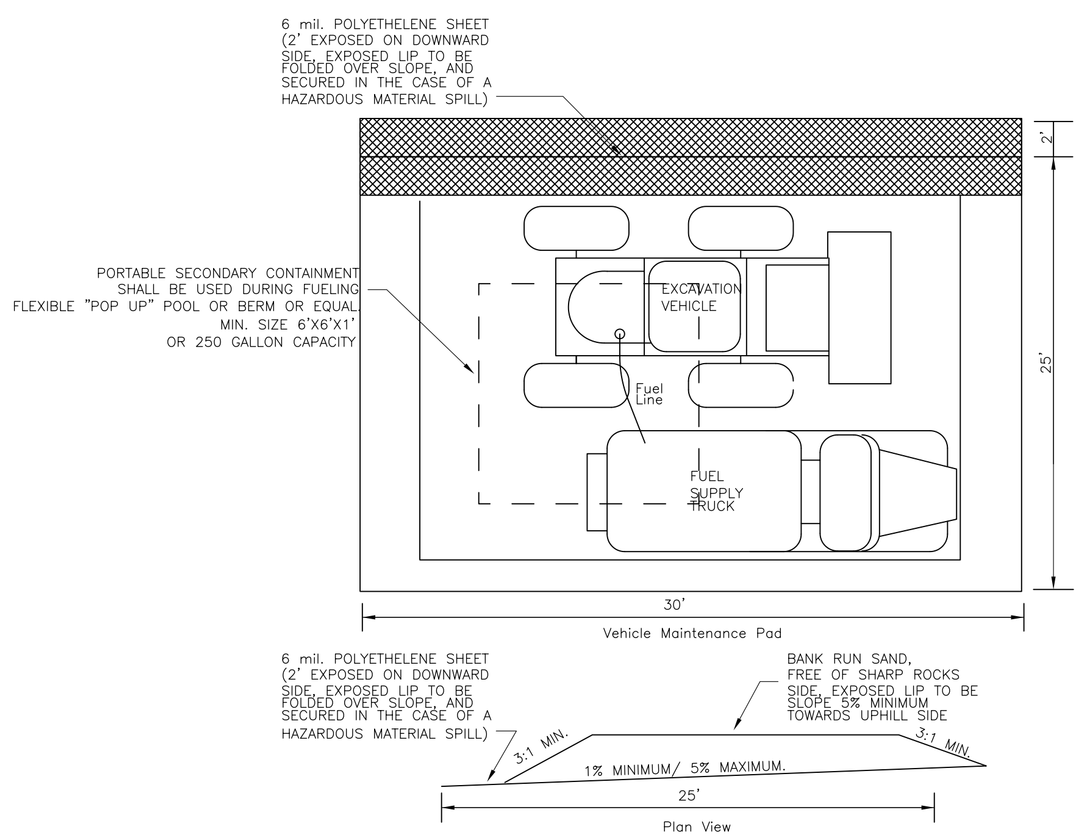

TEMPORARY VEHICLE MAINTENANCE PAD

NOT TO SCALE

RIP-RAP GRADATION

STONE SIZE	% FINER BY WEIGHT				
	D 50 = 6"	D50 = 9"	D 50 = 12"	D50 = 18"	D 50 = 24"
2"	0-15%	0%	–	–	–
4"	20-35%	10-20%	0-10%	–	–
6"	35-50%	25-35%	10-25%	0-10%	–
8"	50-65%	30-50%	20-30%	10-20%	0-10%
10"	60-80%	40-60%	30-40%	15-30%	5-15%
12"	75-100%	–	–	–	–
15"	–	70-100%	45-60%	25-40%	20-30%
20"	–	–	70-100%	40-60%	30-45%
30"	–	–	–	70-100%	50-70%
40	–	–	–	–	70-100%

GRAVEL FILTER GRADATION

SIEVE SIZE	% PASSING BY WEIGHT
3½"	100
3"	85-100
1½"	60-90
¾"	40-70
⅜"	20-50
NO. 4	10-40
NO. 200	0-8

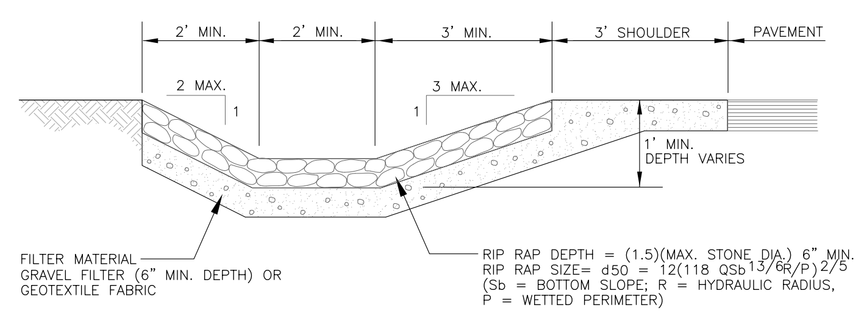

RIP RAP SWALE

FOR USE WHERE VELOCITIES EXCEED 3 FPS

NOT TO SCALE

TAX MAP 210 LOT 57

DETAIL SHEET

GRAVEL EXCAVATION OPERATION

GREEN HILL ROAD, BARRINGTON, NH

OWNED BY

TRINITY CONSERVATION, LLC

PREPARED FOR

TRINITY CONSERVATION, LLC

SCALE: AS NOTED **SEPTEMBER 20, 2012**

REV.	DATE	DESCRIPTION	DR	CK
4	02/15/13	PER DUBOIS & KING REVIEW	JH	JK
3	01/17/13	PER DUBOIS & KING REVIEW	JH	JK

TFM®
Civil Engineers
Structural Engineers
Traffic Engineers
Land Surveyors
Landscape Architects
Scientists

48 Constitution Drive
Bedford, NH 03110
Phone (603) 472-4488
Fax (603) 472-9747
www.tfmoran.com

FILE	DR	FB	
47052.00	JH	–	SHEET 11 OF 12
	CK JK	CADFILE 47052-00 Details	

Copyright 2012 ©Thomas F. Moran, Inc.
48 Constitution Drive, Bedford, N.H. 03110

All rights reserved. These plans and materials may not be copied, duplicated, replicated or otherwise reproduced in any form whatsoever without the prior written permission of Thomas F. Moran, Inc.

This plan is not effective unless signed by a duly authorized officer of Thomas F. Moran, Inc.

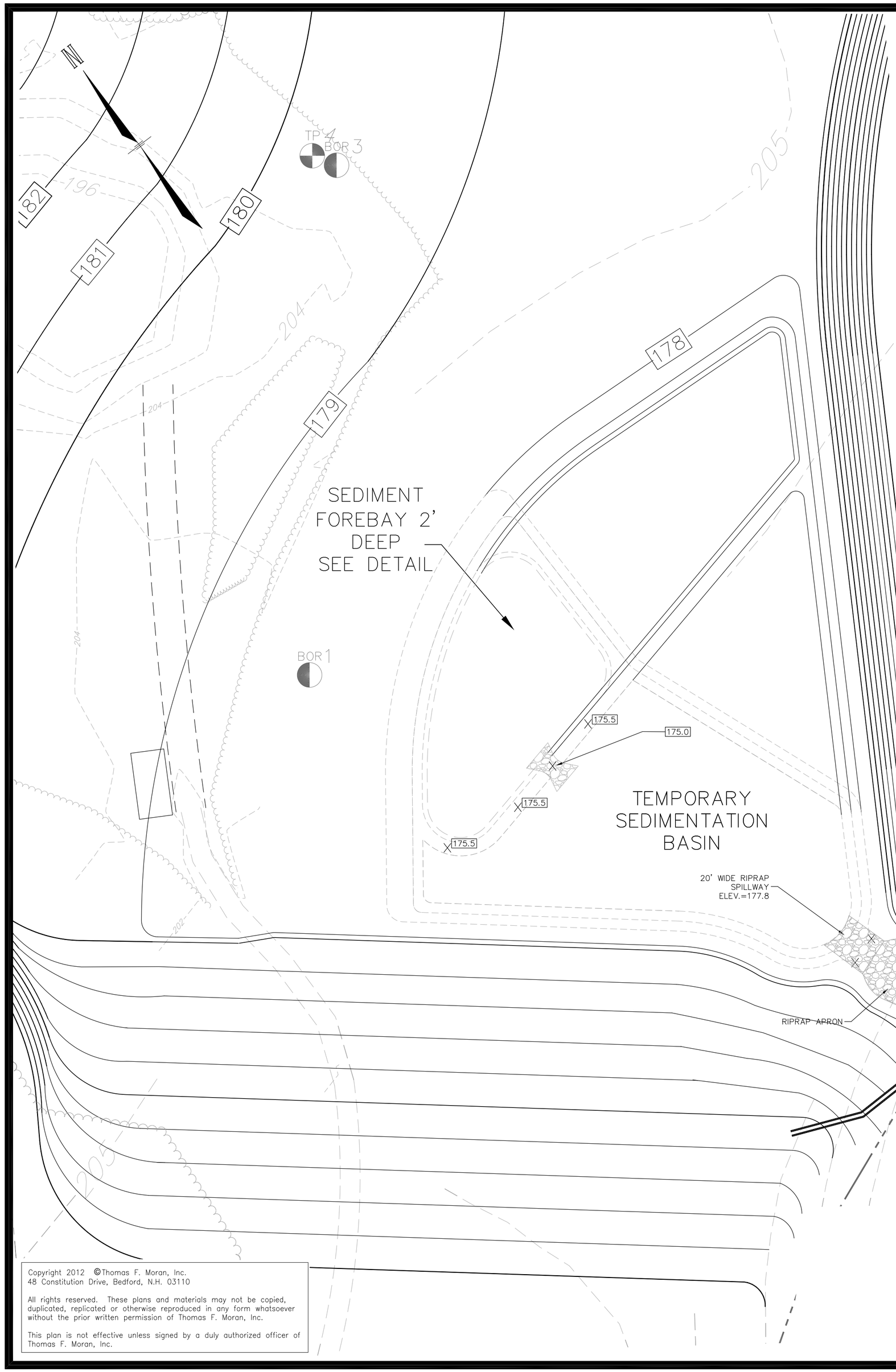

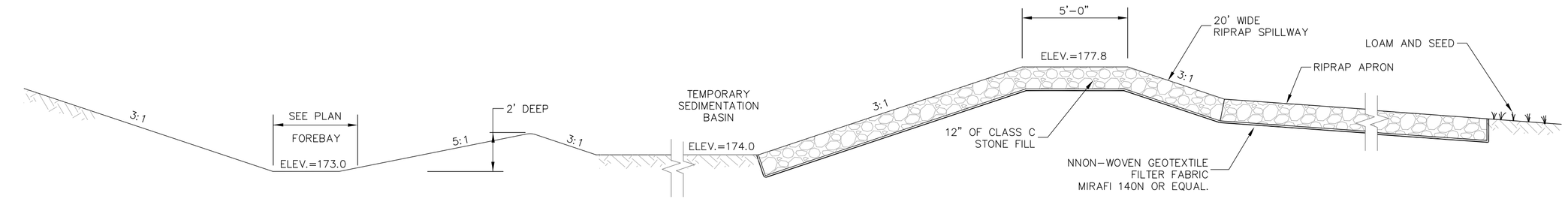

TEMPORARY SEDIMENTATION BASIN DETAIL

NOT TO SCALE

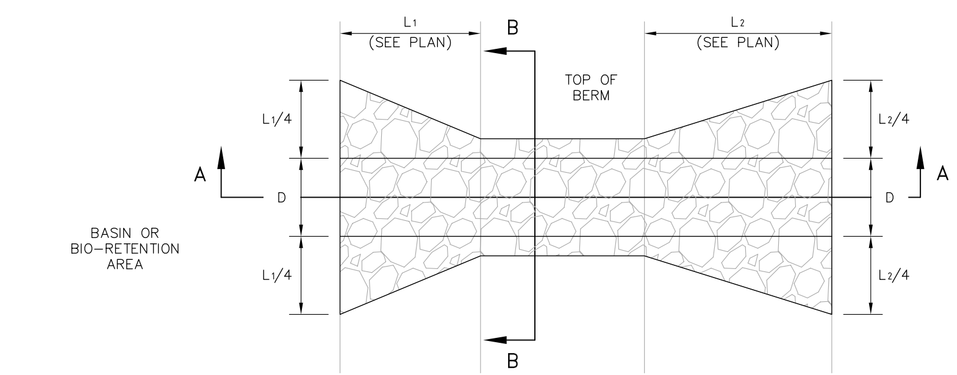

PLAN VIEW

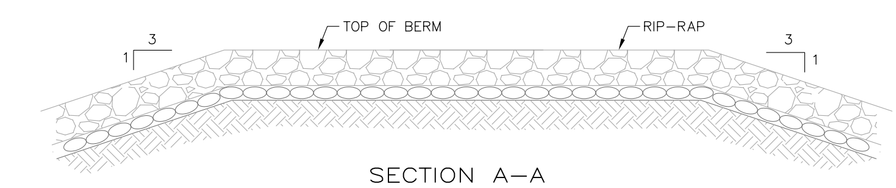

SECTION A–A

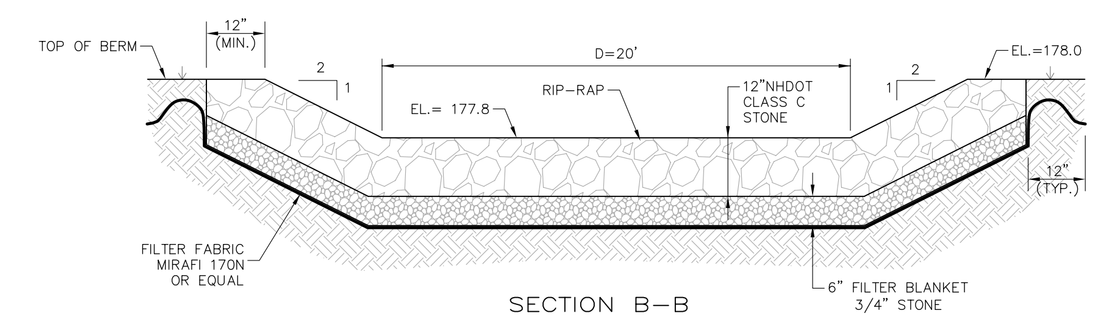

SECTION B–B

EMERGENCY SPILLWAY

NOT TO SCALE

LEGEND

PROPOSED		EXISTING
	EDGE OF PAVEMENT	
	EDGE OF GRAVEL	
	SILT SOCK/STUMP GRINDINGS BERM	
×201.5	SPOT GRADE	×200.5
200	INDEX CONTOUR	200
202	INTERMEDIATE CONTOUR	202
	BROOK, STREAM OR RIVER	
	TREELINE	
	RIP-RAP	

APPROXIMATE 100 YEAR FLOOD PLAIN

DIG SAFE
MA ME NH RI VT
CALL 1-888-DIG-SAFE TOLL FREE
UTILITIES UNDERGROUND PLANT DAMAGE PREVENTION SYSTEM
CONTACT DIG SAFE 72 HOURS PRIOR TO CONSTRUCTION

40 20 10 0 40
Graphic Scale in Feet

REV.	DATE	DESCRIPTION	DR	CK
4	02/15/13	PER DUBOIS & KING REVIEW	JH	JK
3	01/17/13	PER DUBOIS & KING REVIEW	JH	JK

PLANNING BOARD APPROVAL BLOCK

TAX MAP 210 LOT 57

TEMPORARY SEDIMENTATION BASIN PLAN

GRAVEL EXCAVATION OPERATION

GREEN HILL ROAD, BARRINGTON, NH

OWNED BY

TRINITY CONSERVATION, LLC

PREPARED FOR

TRINITY CONSERVATION, LLC

SCALE: 1"=40' **SEPTEMBER 20, 2012**

TFM
Civil Engineers
Structural Engineers
Traffic Engineers
Land Surveyors
Landscape Architects
Scientists

48 Constitution Drive
Bedford, NH 03110
Phone (603) 472-4488
Fax (603) 472-9747
www.tfmoran.com

FILE	DR	FB		
47052.00	JH	–		SHEET 12 OF 12
	CK JK	CADFILE	47052-00 Site	

Copyright 2012 ©Thomas F. Moran, Inc.
48 Constitution Drive, Bedford, N.H. 03110

All rights reserved. These plans and materials may not be copied, duplicated, replicated or otherwise reproduced in any form whatsoever without the prior written permission of Thomas F. Moran, Inc.

This plan is not effective unless signed by a duly authorized officer of Thomas F. Moran, Inc.