SWAINS LAKE
VILLAGE WATER DISTRICT
BARRINGTON, NEW HAMPSHIRE

CEDAR CREEK WATER MAIN EXTENSION

DRAWING INDEX :

C–1 SPECIFICATIONS I

C–2 SPECIFICATIONS II

C–3 TIBBETTS ROAD AND CEDAR CREEK PLAN

C–4 BOYLE LANE PLAN

C–5 DETAILS

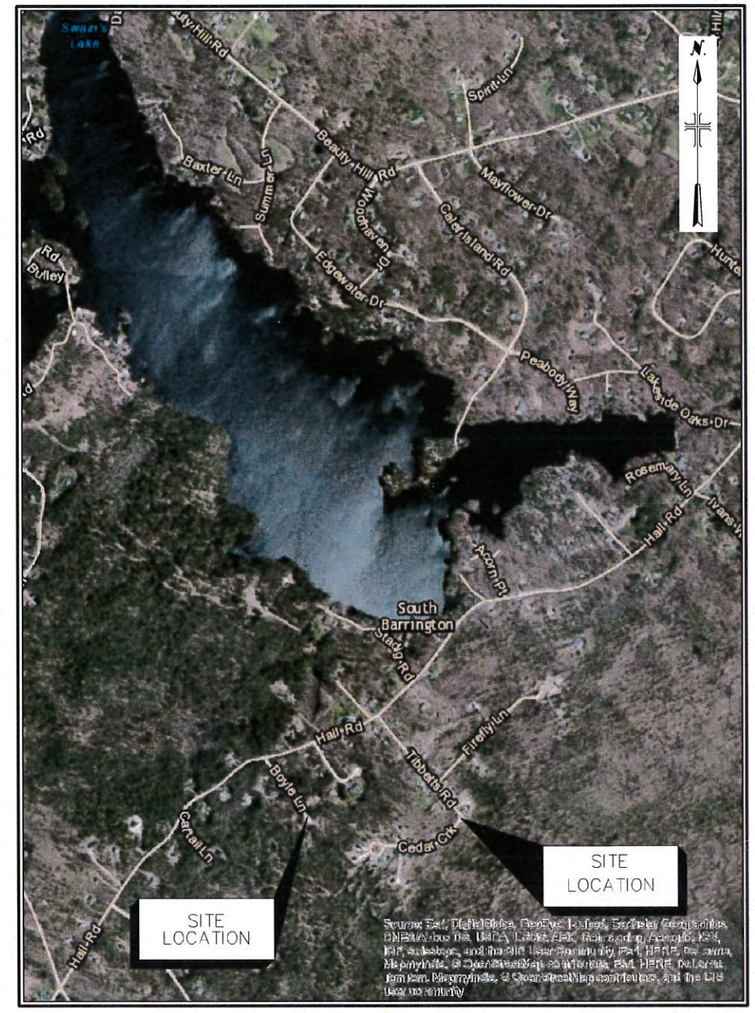

LOCATION MAP

MARCH 2015

CONSULTING ENGINEERS

ARCADIS-U.S., INC.
200 HARVARD MILLS SQ., SUITE 430
WAKEFIELD, MA 01880
TEL: (781) 224-4488

STATE OF NEW HAMPSHIRE
JENNIFER KELLY KACHMAYR
No. 12014
LICENSED
PROFESSIONAL ENGINEER
3-16-15

ARCADIS
Infrastructure · Water · Environment · Buildings

LAND USE OFFICE
MAY 14 2015
RECEIVED

REQUIREMENTS FOR ALL CONTRACTS

LOCATION AND DESCRIPTION OF WORK

THE WORK IS LOCATED IN THE TOWN OF BARRINGTON, NEW HAMPSHIRE. THE WORK TO BE PERFORMED UNDER THIS PROJECT INCLUDES:

WATER MAIN (CONTRACT NO. 1) - EXTENDING A 4-INCH DIAMETER WATER MAIN APPROXIMATELY 1,400 FEET IN TIBBETTS ROAD AND CEDAR CREEK, A PRIVATE ROAD EXTENDING FROM TIBBETTS ROAD INCLUDING ALL WORK FROM THE CONNECTION TO AN EXISTING WATER MAIN UP TO AND INCLUDING INSTALLATION OF THE CURB STOP ON EACH WATER SERVICE; AND VACANT LOT.

PLUMBING (CONTRACT NO. 2) - INSTALLING WATER SERVICES TO 17 DWELLINGS ALONG CEDAR CREEK AND ONE DWELLING ON BOYLE LANE INCLUDING ALL WORK FROM THE CURB STOP ON EACH SERVICE UP TO AND INCLUDING MAKING CONNECTION TO THE PLUMBING WITHIN EACH DWELLING.

THE WORK WILL BE CONSTRUCTED UNDER TWO SEPARATE CONTRACTS OR UNDER A COMBINATION OF BOTH CONTRACTS.

SEQUENCE AND PROGRESS OF WORK

CONTRACT NO. 1 SHALL BE SUBSTANTIALLY COMPLETE, AS DEFINED IN ARTICLE 40 OF THE SUBCONTRACT AGREEMENT, BEFORE NOTICE TO PROCEED FOR CONTRACT NO. 2 IS ISSUED.

NOTICE TO OWNERS OF PROPERTIES ADJACENT TO THE WORK

NOTIFY OWNERS OF ADJACENT PROPERTY AND UTILITIES WHEN EXECUTION OF THE WORK MAY AFFECT THEIR PROPERTY, FACILITIES OR USE OF PROPERTY. PROVIDE NOTICE AT LEAST 48 HOURS IN ADVANCE OF WORK OBSTRUCTING ACCESS OR LIMITING SERVICE FOR AFFECTED PARTIES TO PROVIDE FOR THEIR NEEDS.

SUBMITTALS

SEE ARTICLE 4 OF THE SUBCONTRACT AGREEMENT. SHOP DRAWINGS ARE REQUIRED FOR ALL MANUFACTURED ITEMS TO BE INSTALLED IN THE WORK. OTHER SUBMITTALS ARE REQUIRED AS IDENTIFIED ON THESE DRAWINGS. ASSIGN A SEPARATE AND UNIQUE NUMBER IDENTIFYING EACH SUBMITTAL REQUIRED AND A LETTER DESIGNATION INDICATING THE INITIAL SUBMITTAL OR RE-SUBMITTAL ASSOCIATED WITH EACH SUBMITTAL NUMBER. PROVIDE EITHER TWO PAPER COPIES OR AN ELECTRONIC COPY AS PROVIDED IN THE SUBCONTRACT AGREEMENT. ALLOW AT LEAST 14 DAYS FOR REVIEW. ITEMS FOR ACCEPTANCE ARE NEITHER REVIEWED NOR APPROVED EXCEPT TO NOTE SUBMISSION IN ACCORDANCE WITH THE CONTRACT DOCUMENTS.

PERMITS

PROCURE AND PAY FOR ALL PERMITS, GOVERNMENTAL FEES, INSPECTIONS, LICENSES, APPROVALS, CERTIFICATES AND AUTHORIZATION NECESSARY TO THE EXECUTION AND COMPLETION OF ITS WORK AND DELIVER EVIDENCE OF THE SAME TO ARCADIS.

SAFETY

PREPARE A HEALTH AND SAFETY PLAN AND SUBMIT THE PLAN TO ARCADIS FOR ACCEPTANCE PRIOR TO BEGINNING WORK. AS A MINIMUM, THE HEALTH AND SAFETY PLAN SHALL ADDRESS EXCAVATION, MEDICAL EMERGENCIES AND PROTECTION OF TRAFFIC AND PEDESTRIANS FROM THE WORK .PROVIDE NAME OF CONTRACTOR'S "COMPETENT PERSON" IN RESPONSIBLE CHARGE OF EXCAVATION AND FILL WORK.

MAINTENANCE AND PROTECTION OF TRAFFIC

KEEP ALL STREETS AND TRAFFIC WAYS OPEN FOR PASSAGE OF TRAFFIC AND PEDESTRIANS DURING THE WORK, UNLESS OTHERWISE APPROVED BY AUTHORITY HAVING JURISDICTION OVER THE STREET, TRAFFIC WAY, OR RIGHT-OF-WAY. CONTRACTOR SHALL CONDUCT OPERATIONS SO AS TO MINIMIZE INTERRUPTIONS OF TRAFFIC AND SHALL PROVIDE ACCESS TO ALL PROPERTIES ALONG THE COURSE OF WORK WITHOUT UNREASONABLE DELAY. PROVIDE AND MAINTAIN ACCESS TO ALL DRIVEWAYS TO THE MAXIMUM EXTENT PRACTICAL. BACKFILL THE TRENCH IMMEDIATELY IN OR IN FRONT OF DRIVEWAYS UNLESS REQUIRED OTHERWISE BY THE AUTHORITY HAVING JURISDICTION. PROVIDE METAL PLATES AT DRIVEWAYS WHERE BACKFILLING CANNOT BE COMPLETED IMMEDIATELY. COORDINATE WITH AUTHORITY HAVING JURISDICTION FOR MAINTENANCE AND PROTECTION OF TRAFFIC REQUIREMENTS. PROVIDE SIGNS, SIGNALS, BARRICADES, FLARES, LIGHTS AND OTHER EQUIPMENT, SERVICE, AND PERSONNEL REQUIRED TO REGULATE AND PROTECT ALL TRAFFIC AND WARN OF HAZARDS. SUCH WORK SHALL COMPLY WITH REQUIREMENTS OF AUTHORITIES HAVING JURISDICTION. REMOVE TEMPORARY EQUIPMENT AND FACILITIES WHEN NO LONGER REQUIRED, AND RESTORE GROUNDS TO ORIGINAL OR TO SPECIFIED CONDITIONS, AS APPLICABLE.

TEMPORARY CONTROLS

PROVIDE AND MAINTAIN METHODS, EQUIPMENT, AND TEMPORARY CONSTRUCTION AS REQUIRED TO CONTROL ENVIRONMENTAL CONDITIONS AT THE SITE AND ADJACENT AREAS. MAINTAIN CONTROLS UNTIL NO LONGER REQUIRED. TEMPORARY CONTROLS INCLUDE, BUT ARE NOT LIMITED TO: EROSION & SEDIMENT CONTROLS; NOISE CONTROLS; DUST CONTROL; AND CONTROL OF WATER, INCLUDING STORMWATER RUNOFF.

EROSION CONTROL MEASURES: THE CONTRACTOR SHALL CONDUCT ALL OPERATIONS SO AS TO MINIMIZE EROSION AND PREVENT WATER QUALITY DEGRADATION AND/OR PROPERTY DAMAGE. AN APPROVED EROSION CONTROL PLAN SHALL BE SUBMITTED TO ARCADIS FOR ACCEPTANCE BEFORE BEGINNING CONSTRUCTION. MATERIALS UTILIZED FOR EROSION AND SEDIMENT CONTROLS SHALL BE IN ACCORDANCE WITH THE APPLICABLE REGULATORY REQUIREMENTS. MAINTAIN EROSION AND SEDIMENT CONTROLS UNTIL THE SITE IS RESTORED AND SITE IMPROVEMENTS INCLUDING LANDSCAPING, IF ANY, ARE COMPLETE WITH UNDERLYING SOILS PERMANENTLY STABILIZED.

NOISE CONTROLS: CONTRACTOR'S VEHICLES AND EQUIPMENT SHALL MINIMIZE NOISE EMISSIONS TO GREATEST DEGREE PRACTICABLE. PROVIDE MUFFLERS, SILENCERS, AND SOUND BARRIERS WHEN NECESSARY. NOISE LEVELS SHALL COMPLY WITH LAWS AND REGULATIONS, INCLUDING OSHA REQUIREMENTS AND LOCAL ORDINANCES.

DUST CONTROL: CONTROL OBJECTIONABLE DUST CAUSED BY CONTRACTOR'S OPERATION OF VEHICLES AND EQUIPMENT, CLEARING, AND OTHER ACTIONS. TO MINIMIZE AIRBORNE DUST, APPLY WATER OR USE OTHER METHODS SUBJECT TO ACCEPTANCE OF ARCADIS AND APPROVAL OF AUTHORITIES HAVING JURISDICTION. CONTRACTOR SHALL PREVENT BLOWING AND MOVEMENT OF DUST FROM EXPOSED SOIL SURFACES AND ACCESS ROADS TO REDUCE DAMAGE, NUISANCES, AND HEALTH HAZARDS. CONTROL MAY BE ACHIEVED BY IRRIGATION IN WHICH THE SITE SHALL BE SPRINKLED WITH WATER UNTIL THE SURFACE IS MOIST. APPLY DUST CONTROLS AS FREQUENTLY AS REQUIRED WITHOUT CREATING NUISANCES SUCH AS EXCESSIVE MUD AND PONDING OF WATER AT THE SITE.

WATER CONTROL: PROVIDE METHODS TO CONTROL SURFACE WATER AND WATER FROM EXCAVATIONS TO PREVENT DAMAGE TO THE WORK, THE SITE, AND ADJOINING PROPERTIES. CONTROL FILL, GRADING, AND DITCHING TO DIRECT WATER AWAY FROM EXCAVATIONS AND TO DIRECT DRAINAGE TO PROPER RUNOFF COURSES TO PREVENT EROSION, DAMAGE, OR NUISANCE. DISPOSE OF DRAINAGE WATER IN MANNER TO PREVENT FLOODING, EROSION, AND OTHER DAMAGE TO ANY AND ALL PARTS OF THE SITE AND ADJOINING AREAS, AND THAT COMPLIES WITH LAWS AND REGULATIONS.

POLLUTION CONTROL: PROVIDE MEANS, METHODS, AND FACILITIES REQUIRED TO PREVENT CONTAMINATION OF SOIL, WATER AND ATMOSPHERE CAUSED BY DISCHARGE OF NOXIOUS SUBSTANCES FROM CONSTRUCTION OPERATIONS. PROVIDE EQUIPMENT AND PERSONNEL TO PERFORM EMERGENCY MEASURES REQUIRED TO CONTAIN SPILLS AND TO REMOVE CONTAMINATED SOILS AND LIQUIDS. EXCAVATE CONTAMINATED MATERIAL AND PROPERLY DISPOSE OF OFF-SITE, AND REPLACE WITH SUITABLE COMPACTED FILL AND TOPSOIL.

RECORD DRAWINGS

MAINTAIN AND SUBMIT TO ARCADIS RECORD DOCUMENTS. MAINTAIN IN CONTRACTOR'S FIELD OFFICE, IN CLEAN, DRY LEGIBLE CONDITION, COMPLETE SETS OF THE FOLLOWING RECORD DOCUMENTS: DRAWINGS, SPECIFICATIONS, AND ADDENDA; SHOP DRAWINGS, SAMPLES, AND OTHER CONTRACTOR SUBMITTALS, INCLUDING RECORDS OF TEST RESULTS, APPROVED OR ACCEPTED AS APPLICABLE, BY ENGINEER; CHANGE ORDERS, WORK CHANGE DIRECTIVES, FIELD ORDERS, PHOTOGRAPHIC DOCUMENTATION, SURVEY DATA, DELIVERY TICKETS AND ALL OTHER DOCUMENTS PERTINENT TO THE WORK.

EXISTING UTILITIES

EXISTING UTILITY LOCATIONS HAVE BEEN PLOTTED FROM BEST AVAILABLE DATA AND ARE APPROXIMATE ONLY. CALL DIG SAFE, 811, 72 HOURS PRIOR TO THE ANY EXCAVATION WORK. DETERMINE THE TRUE LOCATION OF EXISTING UNDERGROUND FACILITIES TO WHICH CONNECTIONS ARE TO BE MADE, CROSSED, AND THAT COULD BE DISTURBED. NOTIFY UTILITY OWNERS IN THE AREA OF THE CONSTRUCTION 48 HOURS PRIOR TO STARTING WORK, MEET WITH THE OWNERS OF UNDERGROUND UTILITIES, AND VERIFY THE LOCATION OF UNDERGROUND LINES AND SERVICE CONNECTIONS WITH THE UTILITY OWNER. PROVIDE 3 FOOT CLEARANCE FROM ALL UTILITIES WHERE POSSIBLE. PROVIDE MINIMUM 10 FOOT SEPARATION FROM SEPTIC TANKS AND SEWER LINES AND 25 FOOT SEPARATION FROM LEACH BEDS AND DRY WELLS. ANY DAMAGE TO UNDERGROUND UTILITIES OR SERVICE CONNECTIONS SHALL BE THE RESPONSIBILITY OF THE CONTRACTOR. EXTREME CAUTION SHALL BE USED WHEN WORKING NEAR GAS LINES, ELECTRIC LINES AND TELEPHONE LINES. NO DISRUPTION OF THE USE OF EXISTING UTILITIES BY AREA RESIDENTS WILL BE ALLOWED. CONTACT INFORMATION FOR UTILITIES IS AS FOLLOWS:

WATER -	SWAINS LAKE VILLAGE WATER DISTRICT - (603) 664-9267
ELECTRIC -	PUBLIC SERVICE OF NEW HAMPSHIRE - (603) 669-4000
TELECOMMUNICATION -	FAIRPOINT - (866) 984-2001
	METROCAST CABLEVISION - (800) 952-1001

EARTHWORK MATERIALS

SAND- SHALL CONSIST OF NATURAL OR MANUFACTURED GRANULAR MATERIAL. SAND MATERIAL SHALL CONTAIN NO ORGANIC MATERIAL. SAND SHALL BE NON-PLASTIC, WHEN TESTED IN ACCORDANCE WITH ASTM D 4318, 100 PERCENT SHALL PASS A 1/2-INCH SCREEN AND NO MORE THAN 20 PERCENT SHALL PASS A NO. 200 SCREEN. THE BACKFILL SHALL BE COMPACTED TO NOT LESS THAN 95 PERCENT OF LABORATORY MAXIMUM DENSITY AS DETERMINED BY ASTM D 698. ALL MATERIAL FOR SAND MUST BE APPROVED BY ARCADIS.

SELECT FILL - SELECT FILL SHALL CONSIST OF WELL GRADED GRANULAR OR BANK-RUN GRAVEL FREE FROM ORGANIC MATTER; 100 PERCENT SHALL PASS A 2-INCH SQUARE SIEVE, NOT LESS THAN 30 PERCENT SHALL PASS A NO. 4 SIEVE AND NOT MORE THAN 12 PERCENT SHALL PASS A NO. 200 SIEVE. ALL MATERIAL FOR SELECT FILL MUST BE APPROVED BY ARCADIS.

CRUSHED STONE OR GRAVEL - CRUSHED STONE OR GRAVEL SHALL BE WELL GRADED HARD, SOUND, TOUGH, DURABLE PARTICLES FREE FROM SOFT, THIN, ELONGATED OR LAMINATED PIECES, ORGANIC MATTER AND OTHER DELETERIOUS SUBSTANCE. THE PERCENTAGE BY WEIGHT PASSING A NO. 100 SQUARE SIEVE SHALL NOT EXCEED TEN PERCENT AND ALL STONES LARGER THAN 3-INCHES SHALL BE REMOVED BY SCREENING OR BY HAND. ALL MATERIAL FOR CRUSHED STONE OR GRAVEL MUST BE APPROVED BY ARCADIS.

INSULATION - AS SHOWN. SEE DETAIL ON SHEET C-5.

EXCAVATION

DEWATERING - PROVIDE AND MAINTAIN ADEQUATE DRAINAGE AND DEWATERING EQUIPMENT TO REMOVE OF ALL SURFACE WATER AND GROUNDWATER ENTERING EXCAVATIONS. KEEP EACH EXCAVATION DRY DURING EXCAVATION, SUBGRADE PREPARATION AND CONTINUALLY THEREAFTER UNTIL THE UNDERGROUND FACILITIES TO BE BUILT THEREIN ARE COMPETE AND ACCEPTABLE TO ARCADIS.

EXCAVATION PROTECTION - PROVIDE EXCAVATION PROTECTION SYSTEM(S) IN ACCORDANCE WITH LAWS AND REGULATIONS.

DEPTH- AS SHOWN EXCEPT ARCADIS MAY DIRECT SUCH MINOR CHANGES AS MAY BE REQUIRED.

SUBGRADES- SHALL BE FIRM DENSE AND THOROUGHLY COMPACTED, SHALL BE FREE FROM MUD, MUCK AND OTHER SOFT OR UNSUITABLE MATERIALS AND SHALL REMAIN FIRM AND INTACT UNDER ALL CONSTRUCTION CONDITIONS. IF SUBGRADE BECOMES SOFTENED OR MUCKY BECAUSE OF CONSTRUCTION DELAYS, FAILURE TO DEWATER PROPERLY OR OTHER CAUSE WITHIN CONTRACTOR'S CONTROL IT SHALL BE REESTABLISHED AT CONTRACTOR'S EXPENSE.

PIPE TRENCH PREPARATION - NOT MORE THAN 100 FEET OF TRENCH MAY BE OPENED IN ADVANCE OF INSTALLING PIPE UNLESS DIRECTED OTHERWISE BY AN AUTHORITY HAVING JURISDICTION. TRENCH WIDTH SHALL BE MINIMIZED TO GREATEST EXTENT PRACTICAL CONSISTENT WITH THE DETAILS PROVIDED. EXCAVATED MATERIALS THAT ARE ACCEPTABLE FOR USE AS FILL MAY BE STOCKPILED WITHIN THE LIMITS OF WORK AT AREAS DESIGNATED BY ARCADIS AND AUTHORITIES HAVING JURISDICTION. ALL EXCAVATIONS OUTSIDE LINES AND GRADES SHOWN THAT ARE NOT APPROVED BY ARCADIS SHALL BE AT CONTRACTOR'S EXPENSE.

FILL AND COMPACTION- PROVIDE AND COMPACT ALL FILL REQUIRED FOR THE FINISHED GRADES AS SHOWN AND SPECIFIED. PLACE FILL IN EXCAVATIONS AS PROMPTLY AS PROGRESS OF THE WORK ALLOWS BUT NOT UNTIL OBTAINING AUTHORIZATION FROM ARCADIS AND ANY AUTHORITY HAVING JURISDICTION. SHOULD CIRCUMSTANCES PREVENT COMPLETING BACKFILLING BEFORE THE END OF THE WORK DAY, PROVIDE METAL PLATES OR BARRIERS HAVING THE APPROVAL OF ARCADIS, AUTHORITIES HAVING JURISDICTION AND THE OWNER AT NO ADDITIONAL COST. COMPLETE BACKFILL BEFORE HOLIDAYS AND WEEKENDS. PLACE FILL AT MOISTURE CONTENT AND DENSITY AS SPECIFIED. PERFORM COMPACTION WITH EQUIPMENT SUITABLE FOR THE TYPE OF FILL MATERIAL. PLACE FILL MATERIALS IN HORIZONTAL LOOSE LIFTS NOT EXCEEDING SPECIFIED THICKNESSES. PIPE BEDDING MATERIAL SHALL BE SPREAD AND GRADED TO PROVIDE UNIFORM AND CONTINUOUS SUPPORT BENEATH PIPING AT ALL POINTS BETWEEN BELL HOLES OR PIPE JOINTS. PROVIDE AND COMPACT SUFFICIENT FILL MATERIAL AROUND EACH SIDE OF PIPE AFTER BEDDING COMPACTED AND PIPE ALIGNED IN A MANNER THAT MAINTAINS PIPE ALIGNMENT. COMPACTION OF FILL MATERIAL SHALL BE 95 PERCENT OF MAXIMUM DENSITY (MODIFIED PROCTOR DENSITY).

GRADING- UNIFORMLY GRADE AREAS INCLUDING ADJACENT TRANSITION AREAS. BLEND GRADING OVER TRENCH TO ELEVATIONS REQUIRED FOR FINAL RESTORATION.

DISPOSAL OF EXCAVATED MATERIALS

HAUL AWAY MATERIAL REMOVED FROM EXCAVATIONS THAT DOES NOT COMPLY WITH REQUIREMENTS FOR FILL, OR IS IN EXCESS OF THE QUANTITY REQUIRED FOR FILL. DISPOSAL OF MATERIALS SHALL BE IN COMPLIANCE WITH LAWS AND REGULATIONS AT NO ADDITIONAL COST TO CLIENT.

RESTORATION

ALL AREAS DISTURBED DURING THE WORK SHALL BE RESTORED UNLESS OTHERWISE CALLED FOR HEREIN OR ON THE STANDARD DETAILS. GRASSED AREAS SHALL BE LOAMED, SEEDED WITH LAWN MIX AND MULCHED.

BLASTING

ALL BLASTING OPERATIONS SHALL BE CONDUCTED IN ACCORDANCE WITH APPLICABLE NEW HAMPSHIRE LAW.

1) BLASTING WITHIN 20 FEET OF EXISTING UTILITIES OR WITHIN 50 FEET OF EXISTING STRUCTURES WILL BE ALLOWED ONLY WHEN APPROVED BY THE UTILITY COMPANIES AND/OR PROPERTY OWNER AND SHALL BE PERFORMED BY AN EXPERIENCED BLASTING SUB-CONTRACTOR AND LICENSED IN THE STATE OF NEW HAMPSHIRE USING SMALL CHARGES AND DELAYS.

2) WHERE BLASTING IS PERFORMED, THE CONTRACTOR SHALL TAKE EVERY PRECAUTION TO PROTECT PERSONS, PROPERTY AND THE WORK. THE CONTRACTOR, IN ADDITION TO COMPLYING WITH ALL OTHER REQUIREMENTS SPECIFIED ELSEWHERE IN THESE SPECIFICATIONS, SHALL ALSO CONFORM TO ANY FURTHER REGULATIONS WHICH THE ENGINEER MAY DEEM NECESSARY IN THIS RESPECT. THE CONTRACTOR SHALL BE HELD LIABLE FOR ALL INJURY TO PERSONS AND DAMAGE TO PROPERTY AND THE WORK CAUSED BY BLAST OR EXPLOSION.

FLEXIBLE PAVING

FURNISH AND INSTALL FLEXIBLE, HOT-MIX, HOT-LAID, ASPHALT PAVEMENT ON ALL PAVED ROADS IN ACCORDANCE WITH THE STANDARD DETAIL. PLACE PAVEMENT IMMEDIATELY AFTER COMPACTING AND GRADING EXCAVATIONS IN PAVED ROADWAYS AND OTHER PAVED AREAS. AT THE END OF EACH WORK DAY CONTRACTOR SHALL PLATE THE TRENCH OR LAY PAVEMENT. AT THE END OF THE WORK WEEK, CONTRACTOR SHALL PAVE ALL TRENCHES. NO PLATES ARE TO BE LEFT IN PLACE DURING WORK STOPPAGES INCLUDING HOLIDAYS AND WEEKENDS. THE CONTRACTOR IS RESPONSIBLE TO MAINTAIN AND REPAIR THE TRENCH PAVEMENT FOR THE ENTIRE CONTRACT DURATION.

BURIED PIPING INSTALLATION

PIPING AND VALVING MATERIAL AND INSTALLATION TECHNIQUES SHALL CONFORM WITH THE APPROPRIATE AWWA SPECIFICATION FOR THAT TYPE OF PIPING MATERIAL WHERE SUCH A SPECIFICATION EXISTS. INSTALL PIPING, JOINTS, AND COUPLINGS AS SHOWN, SPECIFIED, AND AS RECOMMENDED BY PIPE AND FITTINGS MANUFACTURER. IN EVENT OF CONFLICT BETWEEN MANUFACTURER'S RECOMMENDATIONS AND THE CONTRACT DOCUMENTS, REQUEST INTERPRETATION FROM ARCADIS BEFORE PROCEEDING. ARCADIS WILL OBSERVE EXCAVATIONS AND BEDDING PRIOR TO LAYING PIPE BY CONTRACTOR. RECEIVE AUTHORIZATION FROM ARCADIS AND ANY AUTHORITY HAVING JURISDICTION BEFORE BACKFILLING INSTALLED PIPE. MINIMUM COVER OVER BURIED PIPING SHALL BE FIVE FEET, UNLESS OTHERWISE SHOWN OR APPROVED BY ARCADIS. RESTRAINED JOINTS AT ALL TEES, BENDS AND DEAD ENDS IN ACCORDANCE WITH DETAILS PROVIDED. ALL PIPES SHALL BE INSTALLED IN TRENCHES AS SHOWN ON THE DRAWINGS.

ANY BURIED PIPING THAT IS FOUND DEFECTIVE IN MATERIAL, ALIGNMENT, COVER, OR JOINING SHALL BE CORRECTED TO THE SATISFACTION OF ARCADIS AND ANY AUTHORITY HAVING JURISDICTION.

CLEANING AND DISINFECTION

SUBMIT INTENDED PROCEDURE FOR APPROVAL. FOLLOW METHOD PRESCRIBED BY LOCAL AUTHORITIES OR IN ACCORDANCE WITH THE PROCEDURES RECOMMENDED BY AWWA C651 EXCEPT BEFORE APPLICATION OF CHLORINE, FLUSH THE PIPING SYSTEM AT A VELOCITY OF NOT LESS THAN 2.5 FEET PER SECOND UNLESS THE TABLET METHOD CONTAINED IN AWWA C651 IS BEING USED. FLUSH SYSTEM WITH POTABLE WATER AFTER APPLICABLE RETENTION TIME. PLACE COMPLETED DWELLING SERVICE CONNECTIONS IN SERVICE IMMEDIATELY UPON EXPIRATION OF THE REQUIRED DETENTION TIME. PLACE OTHER WORK IN SERVICE UPON RECEIPT OF APPROVAL FROM THE AUTHORITY HAVING JURISDICTION. FLUSHING AND DISINFECTION PROCEDURES WILL BE REPEATED UNTIL NO HARMFUL CONTAMINATION IS PRESENT AND AUTHORIZATION TO USE THE LINE IS RECEIVED FROM THE AUTHORITY HAVING JURISDICTION. WATER FOR INITIAL FLUSHING, TESTING, AND DISINFECTION SHALL BE FURNISHED BY SWAINS LAKE VILLAGE WATER DISTRICT. CONTRACTOR SHALL PROVIDE ALL TEMPORARY PIPING, HOSE, VALVES, APPURTENANCES, AND SERVICES REQUIRED. COST OF WATER REQUIRED FOR REDISINFECTION WILL BE PAID BY CONTRACTOR TO SWAINS LAKE VILLAGE WATER DISTRICT AT THE UTILITY'S STANDARD RATES. CHLORINE SHALL BE PROVIDED BY CONTRACTOR. PROPERLY DISPOSE OF CHLORINATED WATER IN ACCORDANCE WITH LAWS AND REGULATIONS.

ARCADIS
Infrastructure · Water · Environment · Buildings

LEGAL ENTITY:
ARCADIS U.S., INC.

CONSULTANTS

SEALS

STATE OF NEW HAMPSHIRE
JAMES PROPER
KELLY LACHMAYR
No. 12014
LICENSED
PROFESSIONAL ENGINEER
3-16-15

BARRINGTON, NEW HAMPSHIRE
SWAINS LAKE VILLAGE WATER DISTRICT

CEDAR CREEK WATER MAIN EXTENSION

MA000725.014A

NO.	DATE	ISSUED FOR	BY

COPYRIGHT: ARCADIS U.S., INC. 2012

DATE:	MARCH 2015
PROJECT NO.:	MA000725.014A
FILE NAME:	C-1
DESIGNED BY:	K. EDWARDS
DRAWN BY:	K. SANDEEP/S. MITCHELL
CHECKED BY:	J. LACHMAYR/J. MAHON

SHEET TITLE

SPECIFICATIONS I

SCALE: NOT TO SCALE

C-1

SHEET 1 OF 5

XREFS: IMAGES:None
User:smitchell Spec:PIRNIE STANDARD File:G:\CADD\ACAD\PROJ\TIBBETTS\Design Drawings\XREF\34 X 22 TITLE BLOCK.DWG Scale:1:1 Date:03/13/2015 Time:11:35 Layout:Model
User:SMITCHELL Spec:PIRNIE STANDARD File:G:\CADD\ACAD\PROJ\TIBBETTS\DESIGN DRAWINGS\C-1.DWG Scale:1:1 SavedDate:2/2/2015 Time:12:22 Plot Date: Mitchell, Seon; 3/13/2015; 11:49 ; Layout:LAYOUT1

REQUIREMENTS FOR WATER MAIN CONTRACT

USE OF THE SITE

THE SITE OF CONTRACT NO 1 CONSISTS OF THAT PORTION OF THE TIBBETTS ROAD RIGHT-OF-WAY FROM THE TERMINUS OF THE EXISTING WATER MAIN TO CEDAR CREEK AND THE CEDAR CREEK RIGHT-OF-WAY. TIBBETTS ROAD IS A CLASS 5 TOWNSHIP ROAD. CEDAR CREEK IS A PRIVATE WAY. THE UTILITY OWNER, THE SWAINS LAKE VILLAGE WATER DISTRICT HAS OBTAINED AN EASEMENT FOR THE CONSTRUCTION AND MAINTENANCE OF THE WATER MAIN IN CEDAR CREEK. CONFINE ALL ACTIVITY TO WITHIN THE PUBLIC RIGHT-OF-WAY AND THE EASEMENT OBTAINED BY THE SLVWD. USE CARE IN PLACING CONSTRUCTION TOOLS, EQUIPMENT, EXCAVATED MATERIALS, AND PRODUCTS TO BE INCORPORATED INTO THE WORK TO AVOID DAMAGING PROPERTY AND INTERFERING WITH TRAFFIC. CONFINE ALL WORK TO THE HOURS REQUIRED BY LAW. DO NOT ENTER PRIVATE PROPERTY OUTSIDE THE CONSTRUCTION LIMITS WITHOUT PERMISSION FROM THE OWNER OF THE PROPERTY.

COORDINATION WITH OWNER OPERATIONS

THE CONTRACTOR AND ARCADIS SHALL MEET TO DETERMINE THE PRECISE LOCATION OF THE CURB STOP.

WATER MAIN CONTRACTOR MAY OPERATE VALVE AND BLOWOFF AT THE TERMINUS OF THE SLVWD WATER MAIN IN TIBBETTS ROAD. NOTIFY OWNER BEFORE OPERATION. OPERATE NO OTHER OWNER FACILITIES.

UPON COMPLETION OF FLUSHING AND DISINFECTION AND THE APPROVAL OF THE CLIENT, THE CONTRACTOR SHALL TURN OVER THE WATER MAIN TO THE SLVWD, THE SWAINS LAKE VILLAGE WATER DISTRICT.

RECORD DRAWINGS

OBTAIN AND MAINTAIN, FOR TRANSMITTAL TO ARCADIS, ACCURATE MEASUREMENTS (TIES) FROM ESTABLISHED PERMANENT REFERENCE POINTS OR LANDMARKS TO EACH VALVE, CORPORATION STOP, CURB STOP, AND FITTINGS ON THE WATER MAIN. PLACE THESE MEASUREMENTS ON THE AS-BUILT DRAWING OR IN SOME OTHER FORM SUITABLE TO ARCADIS.

WATER SYSTEM MATERIALS

DUCTILE IRON PIPE -JOINTS, CLASS AND COATINGS ARE SPECIFIED IN THE PIPING SCHEDULE ON SHEET C-5 OF THE CONTRACT DRAWINGS, CONFORM WITH ANSI/AWWA C151 AND ANSI/AWWA C111. RETAINER GLANDS SHALL BE USED TO RESTRAIN JOINTS AS NECESSARY. RETAINER GLANDS SHALL BE MEGALUG SERIES 1100 BY EBBA IRON SALES, INC. OR APPROVED EQUAL. RESTRAINED JOINTS FOR PUSH-ON JOINT PIPING SHALL BE SURE STOP 350 GASKET BY MCWANE, INC.

DUCTILE IRON FITTINGS - FITTINGS SHALL CONFORM TO ANSI/AWWA C151 AND SHALL BE LINED WITH BITUMINOUS SEAL COATED CEMENT-MORTAR LINING IN ACCORDANCE WITH ANSI/AWWA C104.

RESILIENT-SEATED GATE VALVES - PROVIDE VALVES CONFORMING TO AWWA C509. APPROVED VALVES ARE SERIES A 2360 AS MANUFACTURED BY MUELLER COMPANY OR EQUAL. MATERIALS OF CONSTRUCTION SHALL BE AS FOLLOWS. VALVE BODY, BONNET, AND STUFFING BOX: CAST-IRON, WEDGE: CAST-IRON, SYMMETRICALLY AND FULLY ENCAPSULATED WITH MOLDED RUBBER HAVING MINIMUM 1/8-INCH THICKNESS. STEM: MANGANESE BRONZE. RUBBER ITEMS: BUNA-N OR OTHER SYNTHETIC RUBBER SUITABLE FOR THE APPLICATION. INTERNAL AND EXTERNAL BOLTING AND OTHER HARDWARE INCLUDING PINS, SET SCREWS, PLUG, STUDS, BOLTS, NUTS, AND WASHERS SHALL BE TYPE 316 STAINLESS STEEL. VALVES SHALL OPEN LEFT AND THIS WILL BE CAST ON THE BODY.

VALVE BOXES - VALVE (ROAD) BOXES SHALL BE PROVIDED FOR EACH UNDERGROUND GATE VALVE AND BLOWOFF. VALVE BOXES SHALL BE CAST-IRON OR DUCTILE IRON, HEAVY-DUTY, SUITABLE FOR HIGHWAY LOADING, TWO-PIECE TELESCOPIC, AND ADJUSTABLE. THE LOWER SECTION SHALL BE AT LEAST 5-1/4 INCHES INSIDE DIAMETER. BELLED OR DOMED AT THE BOTTOM TO FIT OVER THE WORK. THE UPPER SECTION SHALL FIT OVER THE LOWER SECTION AND SHALL BE FLANGED AT ITS BASE TO PROVIDE PROPER BEARING. COVERS SHALL BE AT LEAST 6 INCHES IN DIAMETER. SHALL FIT FLUSH WITH THE TOP, AND SHALL HAVE THE WORD "WATER" CAST THEREON IN RAISED LETTERS. VALVE BOXES SHALL BE OF GOOD QUALITY, FREE FROM ALL DEFECTS IN MATERIAL AND WORKMANSHIP, AND SHALL BE COATED WITH TWO COATS OF ASPHALT VARNISH CONFORMING TO FS TT-C-494.

SLEEVE TYPE FLEXIBLE COUPLINGS - STYLE 253 AS MANUFACTURED BY DRESSER PIPING SPECIALTIES. PROVIDE STAINLESS STEEL BOLTS COMPLETE WITH WASHERS AND WITH NITRIDED STAINLESS STEEL NUTS. HARNESS PRESSURE PIPING.

COPPER PIPE - SEAMLESS, BRIGHT ANNEALED COPPER TUBING COMPLYING WITH ASTM B68 AND ASTM B251, TYPE AS SPECIFIED IN THE PIPING SCHEDULE ON SHEET C-5 OF THE CONTRACT DRAWINGS. FITTINGS SHALL BE SOLDERED EXCEPT AT VALVES WHICH MAY BE COMPRESSION.

COPPER PIPE FITTINGS - FITTINGS, CORPORATION STOPS, CURB STOPS AND COUPLINGS CONFORMING WITH ASTM B88 AND AWWA C800 AS APPLICABLE. PRODUCTS AND MANUFACTURE AS FOLLOWS:

1. CORPORATION STOPS SHALL BE 1-INCH, UNLESS OTHERWISE SHOWN. MUELLER THREAD FOR USE WITH DUCTILE IRON PIPE AND 1-INCH COPPER PIPING, AS MANUFACTURED BY MUELLER COMPANY, OR APPROVED EQUAL, AND SHALL OPEN LEFT.
2. CURB STOPS SHALL BE 1-INCH, UNLESS OTHERWISE SHOWN, FORD BALL VALVE FOR USE WITH SERVICE PIPE SHOWING, AS MANUFACTURED BY FORD COMPANY, AND SHALL OPEN LEFT.
3. CURB BOXES SHALL BE MUELLER "BUFFALO TYPE" OR APPROVED EQUAL WITH 2 ½ INCH SHAFT, SUITABLE FOR INSTALLATION AT 5-FOOT BURY. LIDS SHALL BE STAMPED "WATER". BASE SHALL BE 16 INCHES AND TOP SHALL BE 24 OR 26 INCHES.
4. SERVICE SADDLE SHALL BE 2" MUELLER WITH STAINLESS STEEL STRAPS, PRODUCT NUMBER BR2S0474, OR APPROVED EQUAL.

TESTING

ARCADIS WILL ARRANGE FOR LEAKAGE AND DISINFECTION TESTING DESCRIBED IN ANSI/AWWA MANUAL M41 AND AWWA C651. ARCADIS WILL PROVIDE 48 HOURS NOTICE PRIOR TO PERFORMING TESTS. REFER TO PIPE SCHEDULE ON SHEET C-5 OF THE CONTRACT DRAWINGS FOR TYPE OF TEST REQUIRED AND REQUIRED TEST PRESSURE. UNLESS OTHERWISE SPECIFIED, REQUIRED TEST PRESSURES ARE AT THE LOWEST ELEVATION OF PIPELINE SEGMENT BEING TESTED. PIPE SHALL BE SUBJECTED TO A HYDROSTATIC PRESSURE OF AT LEAST 1.5X THE WORKING PRESSURE AT THE POINT OF TESTING. THE TEST WILL BE CONDUCTED FOR A MINIMUM OF TWO HOURS AND THE PRESSURE WILL NOT VARY BY MORE THAN 5 POUNDS PER SQUARE INCH (PSI). LEAKAGE SHALL BE DEFINED AS THE QUANTITY OF WATER THAT MUST BE SUPPLIED INTO THE NEWLY LAID PIPE, OR ANY VALVED SECTION THEREOF, TO MAINTAIN PRESSURE WITHIN 5 PSI OF THE SPECIFIED TEST PRESSURE AFTER THE AIR IN THE PIPELINE HAS BEEN EXPELLED AND THE PIPE HAS BEEN FILLED WITH WATER. ALLOWABLE LEAKAGE RATES ARE BASED ON FORMULA OR TABLE IN ANSI/AWWA MANUAL M41. ACCEPTANCE SHALL BE DETERMINED ON THE BASIS OF ALLOWABLE LEAKAGE AND ACCEPTABLE BACTERIOLOGICAL TEST RESULTS.

CONTRACTOR SHALL ASSIST WITH TESTING BY PROVIDING POWER FOR TESTING AND MEANS TO FILL THE PIPING FROM EXISTING SWAINS LAKE VILLAGE WATER DISTRICT PIPING. CONTRACTOR SHALL AT HIS OWN EXPENSE REPAIR ALL VISIBLE LEAKS REGARDLESS OF THE AMOUNT OF LEAKAGE AND LOCATE AND REPAIR DEFECTIVE PIPING UNTIL THE LEAKAGE IS WITHIN THE SPECIFIED ALLOWANCE. CONTRACTOR SHALL AT HIS OWN EXPENSE REPEAT CLEANING AND DISINFECTION PROCEDURES UNTIL RECEIPT OF APPROVAL FROM THE AUTHORITY HAVING JURISDICTION TO PLACE THE PIPING IN SERVICE. PIPING NOT INSTALLED BY THE CONTRACTOR THAT FAILS THE TEST SHALL BE REPAIRED UPON AUTHORIZATION OF CLIENT. UNLESS OTHERWISE INCLUDED IN THE WORK, REPAIR OF EXISTING PIPING WILL BE PAID AS EXTRA WORK.

REQUIREMENTS FOR PLUMBING CONTRACT

USE OF SITE

THE SITE OF CONTRACT NO 2 CONSISTS OF LOTS OCCUPIED BY DWELLINGS ADJACENT TO CEDAR CREEK AND BOYLE LANE. ARCADIS HAS OBTAINED SITE ACCESS AGREEMENTS FROM THE OWNERS OF THE LOTS. CONFINE ALL ACTIVITY TO WITHIN 20 FEET OF THE WORK. CONFINE ALL WORK TO THE HOURS REQUIRED BY LAW. USE CARE IN PLACING CONSTRUCTION TOOLS, EQUIPMENT, EXCAVATED MATERIALS, AND PRODUCTS TO BE INCORPORATED INTO THE WORK TO AVOID DAMAGING PROPERTY AND OBSTRUCTING ACCESS. DO NOT ENTER PRIVATE PROPERTY OUTSIDE THE CONSTRUCTION LIMITS WITHOUT PERMISSION FROM THE OWNER OF THE PROPERTY.

COORDINATION WITH OWNER OPERATIONS

THE CONTRACTOR AND ARCADIS SHALL MEET WITH THE PROPERTY OWNER AND OUTLINE IN DETAIL WRITTEN AND VERBALLY PRECISELY WHAT WORK WILL BE DONE ON THE PROPERTY AND WHEN THE WORK WILL BE DONE.

THE CONTRACTOR SHALL NOT ENTER UPON PRIVATE PROPERTY TO PERFORM ANY WORK UNTIL ARCADIS HAS FURNISHED THE CONTRACTOR A COPY OF THE SITE ACCESS AGREEMENT WITH THE PROPERTY OWNER AUTHORIZING AND SCHEDULING THE WORK.

PLUMBING CONTRACTOR SHALL INSTALL AND OBTAIN APPROVAL OF EACH SERVICE FROM THE CURB STOP TO THE CONNECTION POINT IN THE DWELLING BEFORE INTERRUPTING THE EXISTING WELL WATER SUPPLY. NOTIFY OWNER BEFORE INTERRUPTING SUPPLY AND CONNECTING SERVICE. COMPLETE CONNECTION DILIGENTLY. COMPLETE DEMOLITION WORK AFTER SERVICE OPERATIONAL.

UPON COMPLETION OF EACH HOUSE CONNECTION AND APPROVAL OF THE CLIENT THE CONTRACTOR SHALL TURN OVER THE HOUSE CONNECTION TO THE PROPERTY OWNER.

THE CONTRACTOR SHALL TURN OVER TO THE SWAINS LAKE VILLAGE WATER DISTRICT THE INFORMATION IT NEEDS TO ADD THE CONNECTION TO ITS BILLING SYSTEM.

PHOTOGRAPHIC DOCUMENTATION

PLUMBING CONTRACTOR SHALL PROVIDE DATED PHOTOGRAPHIC DOCUMENTATION FOR POST-CONSTRUCTION CONDITIONS, INCLUDING PIPING AND EQUIPMENT INSTALLED IN HOMES. PHOTOGRAPHIC DOCUMENTATION SHALL BE IN COLOR. IMAGES SHALL BE SUITABLY STAGED AND SET UP ("FRAMED"), FOCUSED, AND SHALL HAVE ADEQUATE LIGHTING. THE CONTRACTOR SHALL INVITE ARCADIS TO BE PRESENT DURING SUCH EXAMINATION. WRITTEN REPORT OF EXAMINATION AND OF ALL PHOTOGRAPHS SHALL BE DELIVERED TO ARCADIS.

DEMOLITION

EXISTING WELLS ARE TO BE DISCONNECTED BY A LICENSED NEW HAMPSHIRE WATER WELL CONTRACTOR HOLDING A VALID WATER WELL CONTRACTOR LICENSE UNDER RSA 482-B. EXISTING SUPPLY LINE FROM WELL SHALL BE CUT AND CAPPED AS SHOWN. EXISTING BREAKER FOR THE WELL PUMP SHALL BE REMOVED FROM THE CIRCUIT BREAKER PANEL. THE CONTRACTOR SHALL REMOVE THE PUMP, PIPING AND EXISTING WIRING FROM THE WELL AND ALL ABANDONED EQUIPMENT WITHIN THE HOUSEHOLD. ALL REMOVED EQUIPMENT SHALL BE PROPERLY DISPOSED OF. THE CONTRACTOR SHALL DETERMINE IF WORK PERFORMED AFFECTS ELECTRICAL GROUNDING, AND IF SO, RESTORE APPROPRIATE GROUNDING.

PLUMBING MATERIALS

COPPER PIPE - SEAMLESS, BRIGHT ANNEALED COPPER TUBING COMPLYING WITH ASTM B68 AND ASTM B251, TYPE AS SPECIFIED IN THE PIPING SCHEDULE ON SHEET C-5 OF THE CONTRACT DRAWINGS. FITTINGS SHALL BE SOLDERED EXCEPT AT VALVES WHICH MAY BE COMPRESSION.

COPPER PIPE FITTINGS - FITTINGS, VALVES, COUPLINGS CONFORMING WITH ASTM B88 AND AWWA C800 AS APPLICABLE.

POLYETHYLENE (PE) PIPE - COMPLYING WITH AWWA C901-08 WITH INSERTION STIFFENER FITTINGS COMPLYING WITH THE MATERIAL AND PERFORMANCE REQUIREMENTS OF AWWA C800 AND THE MANUFACTURER'S REQUIREMENTS FOR DIMENSIONS AND TOLERANCES.

MAGNETIC TRACER TAPE - 3" UNDERGROUND DETECTABLE TAPE WITH ALUMINUM BACKING MANUFACTURED BY STRANCO, INC. OR APPROVED EQUAL.

WATER METER - SENIUS iPERL WATER MANAGEMENT SYSTEM CONFORMING TO AWWA C700 AND C710, 3/4-INCH DIAMETER, READING DISPLAYED IN GALLONS.

METER HORN - 3/4-INCH COPPERHORN MANUFACTURED BY FORD METER BOX COMPANY, INC. OR APPROVED EQUAL. COORDINATE CONNECTION WITH SPECIFIED METER.

BACKFLOW PREVENTER - 3/4-INCH DOUBLE CHECK BACKFLOW PREVENTER LF007 MANUFACTURED BY WATTS OR APPROVED EQUAL AND TESTED AND CERTIFIED UNDER STANDARD A.S.S.R. 1024.

WELL CAP - 6" ALUMINUM LOCKING WELL CAP AND LOCK MANUFACTURED BY ROYER OR APPROVED EQUAL.

SEAL - 1-$\frac{1}{2}$" LINK-SEAL MODEL CD-3-1/2- MANUFACTURED BY TRUMBULL, OR APPROVED EQUAL.

EXECUTION

INSTALL TRACER TAPE FOR BURIED, NON-METALLIC PIPING. PROVIDE MAGNETIC TRACER TAPE 12 TO 18 INCHES BELOW FINISHED GRADE, ABOVE, AND PARALLEL TO BURIED PIPE. FOR PIPELINES BURIED EIGHT FEET OR GREATER BELOW FINISHED GRADE, PROVIDE SECOND LINE OF MAGNETIC TRACER TAPE 2.5 FEET ABOVE CROWN OF BURIED PIPE, ALIGNED ALONG THE PIPE CENTERLINE. TAPE SHALL BE SPREAD FLAT WITH MESSAGE SIDE UP BEFORE BACKFILLING.

THE NEW SERVICE LINE WILL ENTER THE BASEMENT FOUNDATION WALL AT A POINT WITH A MINIMUM OF 5 FEET OF BURIAL. THE SERVICE LINE WILL BE INSTALLED WITH A MINIMUM OF 5 FEET OF COVER. INSIDE OF THE HOUSE THE SERVICE LINE WILL BE ROUTED TO THE VICINITY OF THE EXISTING HYDROPNUEMATIC TANK WHERE IT WILL BE PLUMBED AS SHOWN AND SPECIFIED.

REQUIREMENTS FOR PLUMBING CONTRACT CONTINUED

EXPOSED PIPING INSTALLATION

PROVIDE ALL LABOR, MATERIALS, EQUIPMENT AND INCIDENTAL AS SHOWN, SPECIFIED, AND REQUIRED TO INSTALL AND TEST ALL EXPOSED PIPING, FITTINGS, AND SPECIALS. THE WORK INCLUDES: ALL TYPES AND SIZES OF PIPING BEGINNING AT THE OUTSIDE FACE OF STRUCTURES OR STRUCTURE FOUNDATIONS AND EXTENDING INTO THE STRUCTURE; PIPING EMBEDDED IN CONCRETE WITHIN A STRUCTURE OR FOUNDATION SHALL BE CONSIDERED AS EXPOSED AND IS INCLUDED HEREIN; WORK ON OR AFFECTING EXISTING EXPOSED PIPING; INSTALLATION OF ALL JOINTING AND GASKET MATERIALS, SPECIALS, FLEXIBLE COUPLINGS, MECHANICAL COUPLINGS, SLEEVES, TIE RODS, AND ALL WORK REQUIRED FOR A COMPLETE EXPOSED PIPING INSTALLATION; SUPPORTS, RESTRAINTS, AND OTHER ANCHORS; FIELD QUALITY CONTROL, INCLUDING TESTING; CLEANING AND DISINFECTING; AND INCORPORATION OF VALVES, METERS, AND SPECIAL ITEMS SHOWN OR SPECIFIED INTO THE PIPING SYSTEMS PER THE CONTRACT DOCUMENTS AND AS REQUIRED.

CONFORM TO MANUFACTURER'S INSTRUCTIONS AND REQUIREMENTS OF AWWA STANDARDS. INSTALL STRAIGHT RUNS TRUE TO LINE AND ELEVATION. INSTALL VERTICAL PIPE TRULY PLUMB IN ALL DIRECTIONS. INSTALL PIPING PARALLEL OR PERPENDICULAR TO WALLS OF STRUCTURES. PIPING AT ANGLES AND 45 DEGREE RUNS ACROSS CORNERS OF STRUCTURES WILL NOT BE ACCEPTED UNLESS SPECIFICALLY SHOWN ON THE CONTRACT DOCUMENTS OR APPROVED BY THE ENGINEER. INSTALL SMALL DIAMETER PIPING GENERALLY IN LOCATIONS OF EXISTING POTABLE WELL WATER PIPES WITHIN THE BUILDING. LOCATE SUCH PIPING AS REQUIRED TO AVOID DUCTS, EQUIPMENT, BEAMS, AND OTHER OBSTRUCTIONS. PROTECT AND KEEP CLEAN INTERIORS, FITTINGS, AND VALVES OF PIPE THAT WILL CONVEY POTABLE WATER, AND OTHER PIPE DESIGNATED BY ENGINEER.

CUT PIPE FROM MEASUREMENTS VERIFIED AT SITE. FIELD CUT PIPE, WHERE REQUIRED, WITH A MACHINE SPECIALLY DESIGNED FOR CUTTING TYPE OF PIPE BEING INSTALLED. MAKE CUTS CAREFULLY WITHOUT DAMAGE TO PIPE, COATING, OR LINING, AND WITH A SMOOTH END AT RIGHT ANGLES TO AXIS OF PIPE. CUT ENDS OF PUSH-ON JOINT TYPE PIPE SHALL BE TAPERED AND SHARP EDGES FILED OFF SMOOTH. DO NOT FLAME-CUT PIPE.

MAKE JOINTS IN ACCORDANCE WITH PIPE MANUFACTURER'S RECOMMENDATIONS. CUT PIPING ACCURATELY AND SQUARELY AND INSTALL WITHOUT FORCING OR SPRINGING. REAM OUT PIPES AND TUBING TO FULL INSIDE DIAMETER AFTER CUTTING. REMOVE ALL SHARP EDGES ON END CUTS. REMOVE ALL CUTTINGS AND FOREIGN MATTER FROM INSIDE OF PIPE AND TUBING BEFORE INSTALLATION.

THOROUGHLY CLEAN ALL PIPE, FITTINGS, VALVES, SPECIALS, AND ACCESSORIES BEFORE INSTALLING. PROVIDE ALL NECESSARY ADAPTERS, SPECIALS, AND CONNECTION PIECES REQUIRED WHEN CONNECTING DIFFERENT TYPES AND SIZES OF PIPE OR CONNECTING PIPE MADE BY DIFFERENT MANUFACTURERS.

PROVIDE SUPPORTS FOR HEAVY ITEMS AS REQUIRED TO PREVENT STRAIN ON ADJOINING PIPING. POSITION FLOW MEASURING DEVICES IN PIPE LINES SO THAT THEY HAVE THE AMOUNT OF STRAIGHT UPSTREAM AND DOWNSTREAM RUNS RECOMMENDED BY THE FLOW MEASURING DEVICE MANUFACTURER.

SEAL ALL PENETRATIONS WITH SPECIFIED SEAL AND GROUT WHERE SHOWN.

FURNISH AND INSTALL LOCKING CAP ON EXISTING WELL.

TESTING

PRESSURE TEST ALL PIPING EXCEPT AS EXEMPTED IN THE PIPE SCHEDULE. CONDUCT ALL TESTS IN PRESENCE OF ARCADIS AND ANY AUTHORITY HAVING JURISDICTION.PROVIDE AT LEAST 48 HOURS NOTICE PRIOR TO PERFORMING ANY TEST.

PROVIDE ALL APPARATUS AND SERVICES REQUIRED FOR TESTING, INCLUDING TEST PUMPS, COMPRESSORS, HOSES, CALIBRATED GAGES, METERS, TEST CONTAINERS, VALVES, FITTINGS, AND TEMPORARY PUMPING SYSTEMS,TEMPORARY BULKHEADS, BRACING, BLOCKING, AND THRUST RESTRAINTS. PROVIDE AIR IF AIR TESTING IS REQUIRED AND POWER IF PUMPING IS REQUIRED UNLESS OTHERWISE SPECIFIED. SWAINS LAKE VILLAGE WATER DISTRICT WILL PROVIDE FLUID REQUIRED FOR HYDROSTATIC TESTING. CONTRACTOR SHALL PROVIDE MEANS TO CONVEY FLUID FOR HYDROSTATIC TESTING INTO PIPING BEING TESTED. REFER TO PIPE SCHEDULE ON SHEET C-5 OF THE CONTRACT DRAWINGS FOR TYPE OF TEST REQUIRED AND REQUIRED TEST PRESSURE. UNLESS OTHERWISE SPECIFIED, REQUIRED TEST PRESSURES ARE AT THE LOWEST ELEVATION OF PIPELINE SEGMENT BEING TESTED. PIPE SHALL BE SUBJECTED TO A HYDROSTATIC PRESSURE OF AT LEAST 1.5X THE WORKING PRESSURE AT THE POINT OF TESTING. NO LEAKAGE ALLOWED FOR PIPE WITH FUSED, THREADED, SOLDERED, OR BRAZED JOINTS.

OBTAIN BACTERIOLOGICAL SAMPLES PRESCRIBED BY THE AUTHORITY HAVING JURISDICTION OR IN ACCORDANCE WITH THE PROCEDURES RECOMMENDED BY AWWA C651 IN THE PRESENCE OF ARCADIS. HAVE SAMPLES ANALYZED IN LABORATORY APPROVED BY THE AGENCY HAVING JURISDICTION.

ACCEPTANCE SHALL BE DETERMINED ON THE BASIS OF ALLOWABLE LEAKAGE AND ACCEPTABLE BACTERIOLOGICAL TEST RESULTS.

CONTRACTOR SHALL AT HIS OWN EXPENSE REPAIR ALL VISIBLE LEAKS REGARDLESS OF THE AMOUNT OF LEAKAGE AND LOCATE AND REPAIR DEFECTIVE PIPING UNTIL THE LEAKAGE IS WITHIN THE SPECIFIED ALLOWANCE. CONTRACTOR SHALL AT HIS OWN EXPENSE REPEAT CLEANING AND DISINFECTION PROCEDURES UNTIL RECEIPT OF APPROVAL FROM THE AUTHORITY HAVING JURISDICTION TO PLACE THE PIPING IN SERVICE. PIPING NOT INSTALLED BY THE CONTRACTOR THAT FAILS THE TEST SHALL BE REPAIRED UPON AUTHORIZATION OF CLIENT. UNLESS OTHERWISE INCLUDED IN THE WORK, REPAIR OF EXISTING PIPING WILL BE PAID AS EXTRA WORK.

LAND USE OFFICE
MAY 14 2015
RECEIVED

ARCADIS
Infrastructure · Water · Environment · Buildings
LEGAL ENTITY:
ARCADIS U.S., INC.

CONSULTANTS

SEALS

STATE OF NEW HAMPSHIRE
JENNIFER KELLY LACHMAYR
No. 13014
LICENSED
PROFESSIONAL ENGINEER
3-16-15

BARRINGTON, NEW HAMPSHIRE
SWAINS LAKE VILLAGE WATER DISTRICT

CEDAR CREEK WATER MAIN EXTENSION

MA000725.014A

NO.	DATE	ISSUED FOR	BY

COPYRIGHT: ARCADIS U.S., INC. 2012

DATE: MARCH 2015
PROJECT NO.: MA000725.014A
FILE NAME: C-2
DESIGNED BY: K. EDWARDS
DRAWN BY: K. SANDEEP/S. MITCHELL
CHECKED BY: J. LACHMAYR/J. MAHON

SHEET TITLE
SPECIFICATIONS II

SCALE: NOT TO SCALE

C-2

SHEET 2 OF 5

XREFS: IMAGES:None
User:smitchell Spec:PIRNIE STANDARD File:G:\CADD\ACAD\PROJ\TIBBETTS\Design Drawings\XREF\34 X 22 TITLE BLOCK.DWG Scale:1:1 Date:03/13/2015 Time:11:35 Layout:Model
User:PERRY Spec:PIRNIE STANDARD File:\\MA02FP01\OFFICEDATA\WAKEFIELD-MA\CADD\ACAD\PROJ\TIBBETTS\DESIGN DRAWINGS\C-2.DWG Scale:1:1 SavedDate:3/20/2015 Time:09:49 Plot Date: Perry, Stephen G.; 3/20/2015; 09:52 ; Layout:LAYOUT1

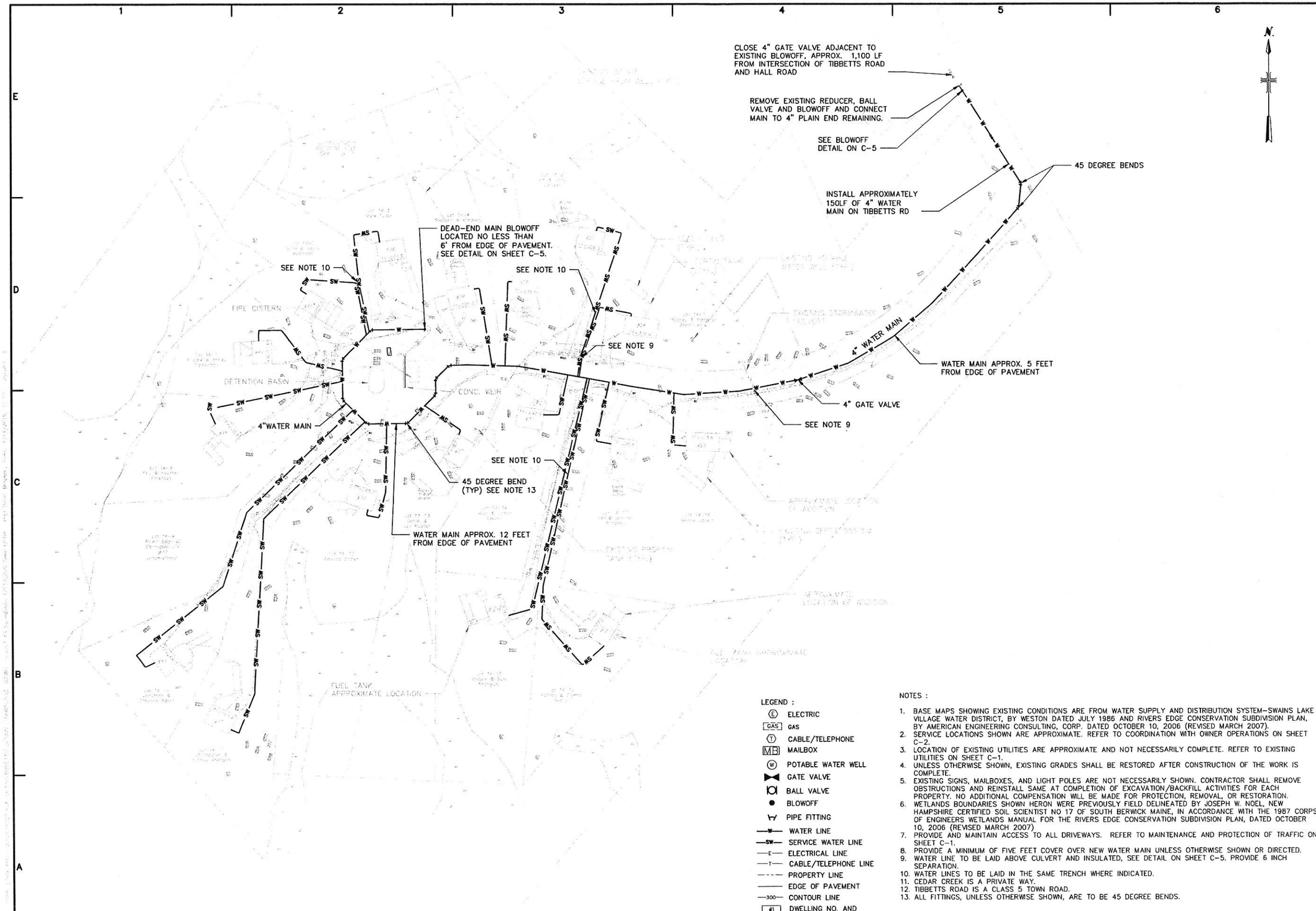

LEGEND :

- (E) ELECTRIC
- GAS GAS
- (T) CABLE/TELEPHONE
- MB MAILBOX
- (W) POTABLE WATER WELL
- GATE VALVE
- BALL VALVE
- BLOWOFF
- PIPE FITTING
- —W— WATER LINE
- —SW— SERVICE WATER LINE
- —E— ELECTRICAL LINE
- —T— CABLE/TELEPHONE LINE
- PROPERTY LINE
- EDGE OF PAVEMENT
- —300— CONTOUR LINE
- #1 300.0 DWELLING NO. AND FIRST FLOOR ELEV.

NOTES :

1. BASE MAPS SHOWING EXISTING CONDITIONS ARE FROM WATER SUPPLY AND DISTRIBUTION SYSTEM-SWAINS LAKE VILLAGE WATER DISTRICT, BY WESTON DATED JULY 1986 AND RIVERS EDGE CONSERVATION SUBDIVISION PLAN, BY AMERICAN ENGINEERING CONSULTING, CORP. DATED OCTOBER 10, 2006 (REVISED MARCH 2007).
2. SERVICE LOCATIONS SHOWN ARE APPROXIMATE. REFER TO COORDINATION WITH OWNER OPERATIONS ON SHEET C-2.
3. LOCATION OF EXISTING UTILITIES ARE APPROXIMATE AND NOT NECESSARILY COMPLETE. REFER TO EXISTING UTILITIES ON SHEET C-1.
4. UNLESS OTHERWISE SHOWN, EXISTING GRADES SHALL BE RESTORED AFTER CONSTRUCTION OF THE WORK IS COMPLETE.
5. EXISTING SIGNS, MAILBOXES, AND LIGHT POLES ARE NOT NECESSARILY SHOWN. CONTRACTOR SHALL REMOVE OBSTRUCTIONS AND REINSTALL SAME AT COMPLETION OF EXCAVATION/BACKFILL ACTIVITIES FOR EACH PROPERTY. NO ADDITIONAL COMPENSATION WILL BE MADE FOR PROTECTION, REMOVAL, OR RESTORATION.
6. WETLANDS BOUNDARIES SHOWN HERON WERE PREVIOUSLY FIELD DELINEATED BY JOSEPH W. NOEL, NEW HAMPSHIRE CERTIFIED SOIL SCIENTIST NO 17 OF SOUTH BERWICK MAINE, IN ACCORDANCE WITH THE 1987 CORPS OF ENGINEERS WETLANDS MANUAL FOR THE RIVERS EDGE CONSERVATION SUBDIVISION PLAN, DATED OCTOBER 10, 2006 (REVISED MARCH 2007)
7. PROVIDE AND MAINTAIN ACCESS TO ALL DRIVEWAYS. REFER TO MAINTENANCE AND PROTECTION OF TRAFFIC ON SHEET C-1.
8. PROVIDE A MINIMUM OF FIVE FEET COVER OVER NEW WATER MAIN UNLESS OTHERWISE SHOWN OR DIRECTED.
9. WATER LINE TO BE LAID ABOVE CULVERT AND INSULATED, SEE DETAIL ON SHEET C-5. PROVIDE 6 INCH SEPARATION.
10. WATER LINES TO BE LAID IN THE SAME TRENCH WHERE INDICATED.
11. CEDAR CREEK IS A PRIVATE WAY.
12. TIBBETTS ROAD IS A CLASS 5 TOWN ROAD.
13. ALL FITTINGS, UNLESS OTHERWISE SHOWN, ARE TO BE 45 DEGREE BENDS.

ARCADIS
Infrastructure · Water · Environment · Buildings

LEGAL ENTITY:
ARCADIS U.S., INC.

CONSULTANTS

SEALS

STATE OF NEW HAMPSHIRE
JENNIFER KELLY LACHMAYR
No. 12014
LICENSED
PROFESSIONAL ENGINEER
3-16-15

BARRINGTON, NEW HAMPSHIRE
SWAINS LAKE VILLAGE WATER DISTRICT

CEDAR CREEK WATER MAIN EXTENSION

MA000725.014A

NO.	DATE	ISSUED FOR	BY

COPYRIGHT: ARCADIS U.S., INC. 2012

DATE: MARCH 2015
PROJECT NO.: MA000725.014A
FILE NAME: C-3
DESIGNED BY: K. EDWARDS
DRAWN BY: K. SANDEEP/S. MITCHELL
CHECKED BY: J. LACHMAYR/J. MAHON

SHEET TITLE

TIBBETTS ROAD AND CEDAR CREEK PLAN

SCALE: 0 30' 60' 120'

C-3

SHEET 3 OF 5

XREFS: IMAGES: None
User: smitchell Spec: PIRNIE STANDARD File: G:\CADD\ACAD\PROJ\TIBBETTS\Design Drawings\XREF\34 X 22 TITLE BLOCK.DWG Scale: 1:1 Date: 03/13/2015 Time: 11:35 Layout: Model

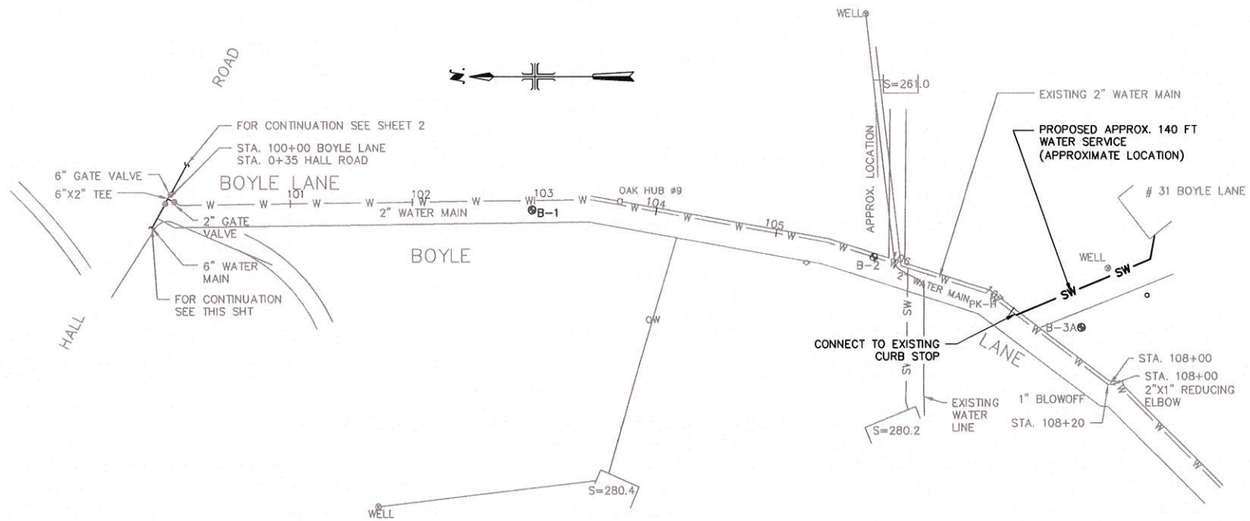

HOUSE CONNECTION PLAN FOR 31 BOYLE LANE

N.T.S.

LEGEND :

- ELECTRIC
- GAS
- CABLE/TELEPHONE
- MAILBOX
- POTABLE WATER WELL
- GATE VALVE
- BALL VALVE
- BLOWOFF
- PIPE FITTING
- WATER LINE
- SERVICE WATER LINE
- ELECTRICAL LINE
- CABLE/TELEPHONE LINE
- PROPERTY LINE
- EDGE OF PAVEMENT
- CONTOUR LINE
- DWELLING NO. AND FIRST FLOOR ELEV.

NOTES :

1. BASE MAPS SHOWING EXISTING CONDITIONS ARE FROM WATER SUPPLY AND DISTRIBUTION SYSTEM-SWAINS LAKE VILLAGE WATER DISTRICT, BY WESTON DATED JULY 1986
2. SERVICE LOCATIONS SHOWN ARE APPROXIMATE. REFER TO COORDINATION WITH OWNERS OPERATIONS ON SHEET C-2.
3. LOCATION OF EXISTING UTILITIES ARE APPROXIMATE AND NOT NECESSARILY COMPLETE. REFER TO EXISTING UTILITIES ON SHEET C-1.
4. UNLESS OTHERWISE SHOWN, EXISTING GRADES SHALL BE RESTORED AFTER CONSTRUCTION OF THE WORK IS COMPLETE.
5. EXISTING SIGNS, MAILBOXES, AND LIGHT POLES ARE NOT NECESSARILY SHOWN. CONTRACTOR SHALL REMOVE OBSTRUCTIONS AND REINSTALL SAME AT COMPLETION OF EXCAVATION/BACKFILL ACTIVITIES FOR EACH PROPERTY. NO ADDITIONAL COMPENSATION WILL BE MADE FOR PROTECTION, REMOVAL, OR RESTORATION.
6. BOYLE LANE IS A CLASS 5 TOWN ROAD.

LAND USE OFFICE
MAY 14 2015
RECEIVED

ARCADIS
Infrastructure · Water · Environment · Buildings

LEGAL ENTITY:
ARCADIS U.S., INC.

CONSULTANTS

SEALS

STATE OF NEW HAMPSHIRE
JENNIFER KELLY LACHMAYR
No. 12014
LICENSED
PROFESSIONAL ENGINEER
3-16-15

BARRINGTON, NEW HAMPSHIRE
SWAINS LAKE VILLAGE WATER DISTRICT

CEDAR CREEK WATER MAIN EXTENSION

MA000725.014A

NO.	DATE	ISSUED FOR	BY

COPYRIGHT: ARCADIS U.S., INC. 2012

DATE: MARCH 2015
PROJECT NO.: MA000725.014A
FILE NAME: C-4
DESIGNED BY: K. EDWARDS
DRAWN BY: K. SANDEEP/S.MITCHELL
CHECKED BY: J. LACHMAYR/J. MAHON

SHEET TITLE
BOYLE LANE PLAN

SCALE: NOT TO SCALE

C-4

SHEET 4 OF 5

XREFS: IMAGES:None
User:smitchell Spec:PIRNIE STANDARD File:G:\CADD\ACAD\PROJ\TIBBETTS\Design Drawings\XREF\34 X 22 TITLE BLOCK.DWG Scale:1:1 Date:03/13/2015 Time:11:35 Layout:Model
User:SMITCHELL Spec:PIRNIE STANDARD File:G:\CADD\ACAD\PROJ\TIBBETTS\DESIGN DRAWINGS\C-4.DWG Scale:1:1 SavedDate:3/13/2015 Time:11:59 Plot Date: Mitchell, Sean: 3/13/2015; 12:00 ; Layout:C-4

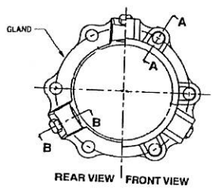

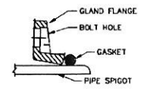

SECTION A–A

SECTION A-A

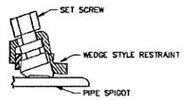

SECTION B–B

SECTION B-B

REQUIRED LENGTH OF RESTRAINED JOINTS FROM FITTING (FEET)							
PIPE SIZE	90° BEND	45° BEND OR WYE BRANCH	22 1/2° BEND	11 1/4° BEND	PLUG OR CAP	TEE (BRANCH)	REDUCER
4"	17	7	4	2	30	22	N/A

RESTRAINED MECHANICAL JOINT

NOT TO SCALE

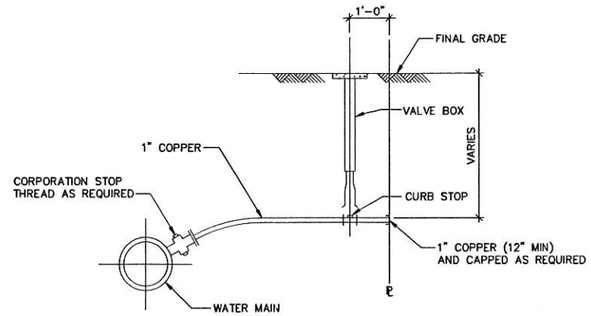

NOTES:

1. REFER TO SPECIFICATIONS FOR MANUFACTURERS PRODUCTS AND EXECUTION.
2. CUT AND REPLACE PAVEMENT AND CURBS AS SHOWN

UTILITY SERVICE CONNECTION

NOT TO SCALE

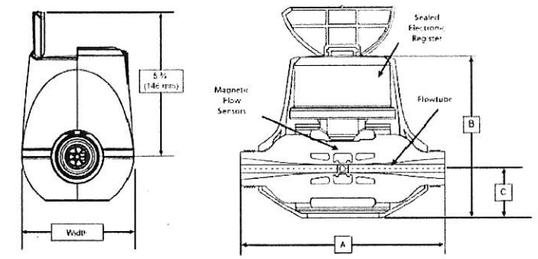

Size	A (Lay length)	B	C	Spud Ends	NPSM Thread Size	Width	Net Weight
3/4" (DN 20 mm)	9" (229 mm)	6 11/32" (165 mm)	1 3/4" (44 mm)	3/4" (20 mm)	1" (26 mm)	4 1/2" (114 mm)	3.2 lb (1.5 kg)

WATER METER

NOT TO SCALE

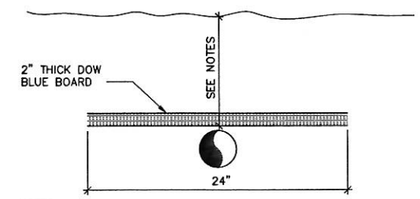

NOTES:

1. INSULATE ALL UNDERGROUND PIPING WHERE LESS THAN 5 FEET OF COVER.

PIPE INSULATION

NOT TO SCALE

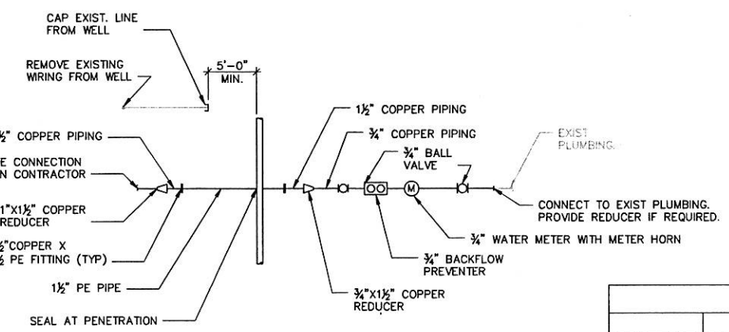

DWELLING SERVICE CONNECTION

NOT TO SCALE

PIPE SCHEDULE								
CONTRACT	DIAMETER	MATERIAL	BEDDING/ INITIAL BACKFILL	INTERIOR LINING	EXTERIOR COATING	PRESSURE CLASS/ THICKNESS	JOINT TYPE	HYDROSTATIC TEST PRESSURE
MAIN	4"	DI	SAND	CL	AS	TC 52	RPOJ	100
MAIN	1"/2"	C	SAND	–	–	K/SOFT	Sd/CSC	NR
PLUMBING	1.5"	C	SAND	–	–	K/SOFT	Sd/CSC	100
PLUMBING	1.5"	PE	SAND	–	–	C901	MCR	100
PLUMBING	¾"	C		–	–	L/HARD	Sd/CSC	100

LEGEND

DI – DUCTILE IRON
C – COPPER
PE – POLYETHYLENE PIPE
CL – CEMENT MORTAR LINED
AS – ASPHALT COATED
RPOJ – RESTRAINED PUSH ON JOINTS
Sd – SOLDER
CSC – COMPRESSION SLEEVE COUPLING
MCR – METAL CRIMP RING

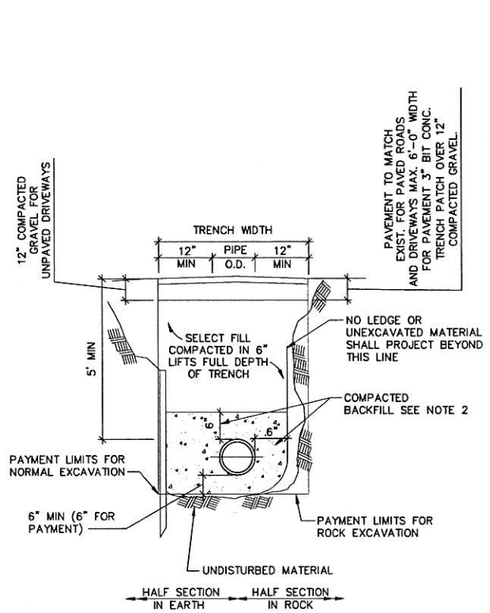

NOTES:

1. SHEETING IF USED IN ALL CASES SHALL BE LEFT IN PLACE BELOW A LINE 12" ABOVE THE TOP OF THE PIPE. UNLESS OTHERWISE INDICATED OR DIRECTED.
2. SEE PIPE SCHEDULE ON THIS SHEET AND SPECIFICATIONS SHOWN ON SHEET C–1.
3. TRENCHES IN GRASS AREAS SHALL BE RECEIVE 6 INCHES OF TOPSOIL AND SEED IN ACCORDANCE WITH SPECIFICATIONS SHOWN ON SHEET C–1.

WATER LINE TRENCH SECTION

NOT TO SCALE

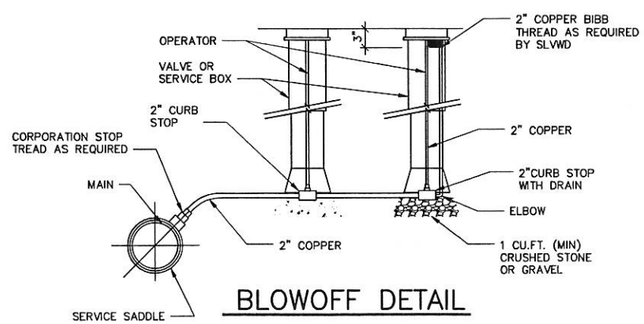

BLOWOFF DETAIL

NOT TO SCALE

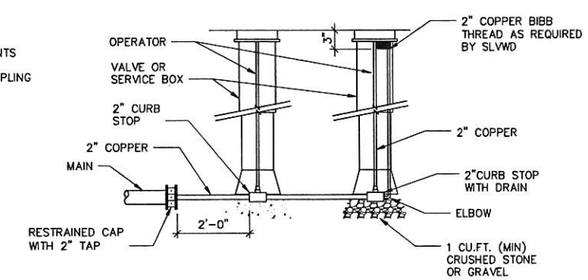

DEAD–END MAIN BLOWOFF DETAIL

NOT TO SCALE

NOTES:

1. BLOWOFF ASSEMBLY SHALL BE MECHANICALLY RESTRAINED WITH LOCKING PUSH–ON GASKETS AND MEGA LUG RESTRAINER GLANDS.

ARCADIS
Infrastructure · Water · Environment · Buildings

LEGAL ENTITY:
ARCADIS U.S., INC.

CONSULTANTS

SEALS

STATE OF NEW HAMPSHIRE
JENNIFER KELLY LACHMAYR
No. 12014
LICENSED
PROFESSIONAL ENGINEER
3-16-15

BARRINGTON, NEW HAMPSHIRE
SWAINS LAKE VILLAGE WATER DISTRICT

CEDAR CREEK WATER MAIN EXTENSION

MA000725.014A

NO.	DATE	ISSUED FOR	BY

COPYRIGHT: ARCADIS U.S., INC. 2012

DATE: MARCH 2015
PROJECT NO.: MA000725.014A
FILE NAME: C–5
DESIGNED BY: K. EDWARDS
DRAWN BY: K. SANDEEP/S. MITCHELL
CHECKED BY: J. LACHMAYR/J. MAHON

SHEET TITLE

DETAILS

SCALE: NOT TO SCALE

C–5

SHEET 5 OF 5

XREFS: IMAGES:None
User:smitchell Spec:PIRNIE STANDARD File:G:\CADD\ACAD\PROJ\TIBBETTS\Design Drawings\XREF\34 x 22 TITLE BLOCK.DWG Scale:1:1 Date:03/13/2015 Time:11:35 Layout:Model
User:SMITCHELL Spec:PIRNIE STANDARD File:G:\CADD\ACAD\PROJ\TIBBETTS\DESIGN DRAWINGS\C-5.DWG Scale:1:40 SavedDate:3/13/2015 Time:12:40 Plot Date: Mitchell, Sean: 3/13/2015; 14:22 ; Layout:C-5