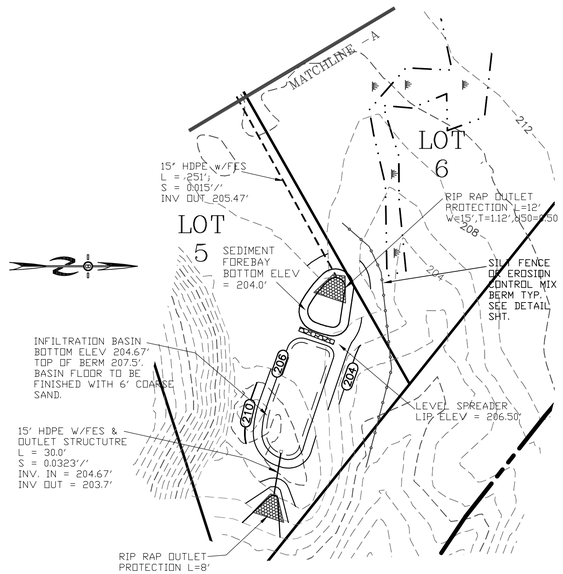

BASIN -A
HYDROCAD POND #2

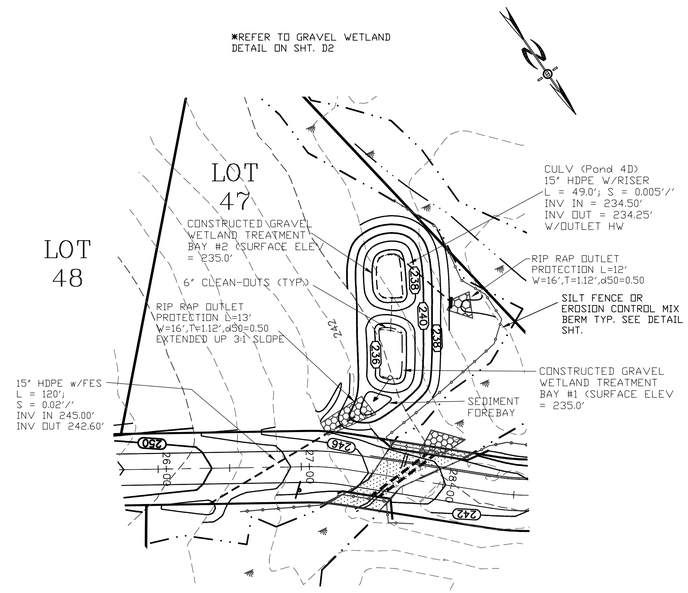

BASIN -B
HYDROCAD POND #4D

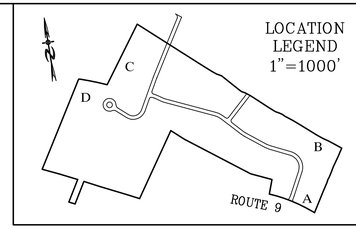

PREPARED FOR:
HARBOR STREET LTD. PARTNERSHIP
7B EMERY LANE
STRATHAM, NH 03885

BEALS • ASSOCIATES PLLC
70 PORTSMOUTH AVE, STRATHAM, N.H. 03885
PHONE: 603-583-4860, FAX. 603-583-4863

NOTES
1. REINFORCING STEEL SHALL CONSIST OF A SINGLE LAYER OF HORIZ. AND VERT. PLACED #4 REBAR @ 12" O.C.
2. CONCRETE BOX TO BE CONSTRUCTED OR PRE CAST OF EQUAL DIMENSIONS & REINFORCING
3. CONCRETE SLAB TO BE CONSTRUCTED ALONG W/ BASE. FOR PRE CAST BOX, A SLOTTED CONCRETE SLAB TO BE USED.
4. SECTION JOINTS AND PIPE OPENING SHALL BE SEALED WITH MORTAR BY CONTRACTOR.
5. ALL REBAR TO BE PAINTED WITH RUST-RESISTANT PAINT, COLOR AT CONTRACTOR'S DISCRETION.
6. TO BE SUPPLIED BY CAPITAL CONCRETE PRODUCTS OF HENNIKER, N.H., (1-603 -428-3218) OR EQUAL.

LIST OF MATERIALS
1. 3 C.Y. - 5000 PSI CONCRETE
2. 15 ANGLE IRONS @ 4' LENGTH
3. REQUIRED S.S. BOLTS & FASTENERS
4. 1/4" STEEL PLATE W/ DRILLED ORIFICES
5. 1 C.Y. - CRUSHED STONE FOR BASE
6. 48 #5 REBARS @1'2' & 3' LENGTHS
7. 32 #4 REBARS @ 4.5' LENGTH

SAFETY
STEEP SLOPES SHALL BE AVOIDED. RECOMMENDED THAT SIDE SLOPES OF 4:1 (HORIZONTAL TO VERTICAL) OR FLATTER BE USED WHERE TOPOGRAPHY PERMITS. IF TOPOGRAPHY WILL NOT ALLOW SUCH SLOPES THEN THE PERIMETER OF THE BASIN SHOULD BE FENCED. WARNING SIGNS AND LIFESAVING EQUIPMENT SHOULD BE AVAILABLE AT EACH STRUCTURE.

MAINTENANCE
EMBANKMENT– SHOULD BE INSEPCTED ANUALLY TO DETERMINE IF RODENT BURROWS, WET AREAS, OR EROSION OF THE FILL IS TAKING PLACE.

VEGETATION– TO BE PROTECTED FROM DAMAGE BY FIRE, GRAZING, TRAFFIC, AND DENSE WEED GROWTH. LIME AND FERTILIZER SHOULD BE APPLIED AS NECESSARY AS DETERMINED BY SOIL TESTS. TREES AND SHRUBS SHOULD BE KEPT OFF THE EMBANKMENT AND EMERGENCY SPILLWAYS.

INLETS– INSPECTED ANNUALLY AND AFTER EVERY MAJOR STORM. ACCUMULATED DEBRIS AND SEEDIMENT SHOULD BE REMOVED. COATED PIPES SHOOULD INSPECTED AND REPAIRED AS NECESSARY.

OUTLET– INSPECTED ANNUALLY AND AFTER EVERY MAJOR STORM. CONDITION OF PIPES SHOULD BE NOTED AND REPAIRED AS NEEDED. IF EROSION IS TAKING PLACE THEN MEASURES SHOULD BE TAKEN TO STABILIZE AND PROTECT THE AFFECTED AREA OF THE OUTLET.

SEDIMENT– SHOULD BE CHECKED CONTINUALLY. WHEN SEDIMENT ACCUMULATIONS REACH THE PREDETERMINED DESIGN ELEVATION, THE SEDIMENT SHOULD BE REMOVED AND PROPERLY DISPOSED OF.

SAFETY INSPECTION– ALL PERMANENT IMPOUNDMENTS SHOULD BE INSPECTED BY A QUALIFIED PROFESSIONAL ENGINEER ON A PERIODIC BASIS. IF THERE IS POTENTIAL FOR SIGNIFICANT DAMAGE OR LOSS OF LIFE DOWNSTREAM, THEN THE INSPECTION SHOULD BE CARRIED OUT ANNUALLY. INSPECTION SHOULD ALSO BE MADE AFTER EVERY MAJOR STORM.

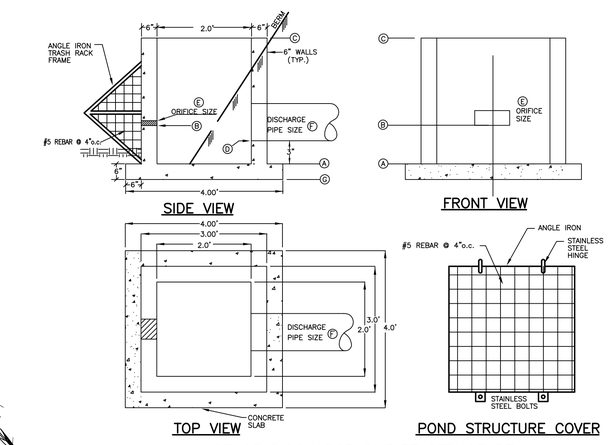

STAGE DISCHARGE OUTLET STRUCTURE
NOT TO SCALE

	Ⓐ	Ⓑ	Ⓒ	Ⓓ	Ⓔ	Ⓕ	Ⓖ
BASIN "A"	206.42'	208.00'	209.00'	206.67'	6"Wx4"H	15"	205.92'
BASIN "1"	183.75'	185.80'	186.50'	184.0'	12"Wx6"H	18"	183.25'

NOTE: WET POND TO BE SEEDED WITH N.E. CONSERVATION MIX OR APPROVED EQUIVALENT.

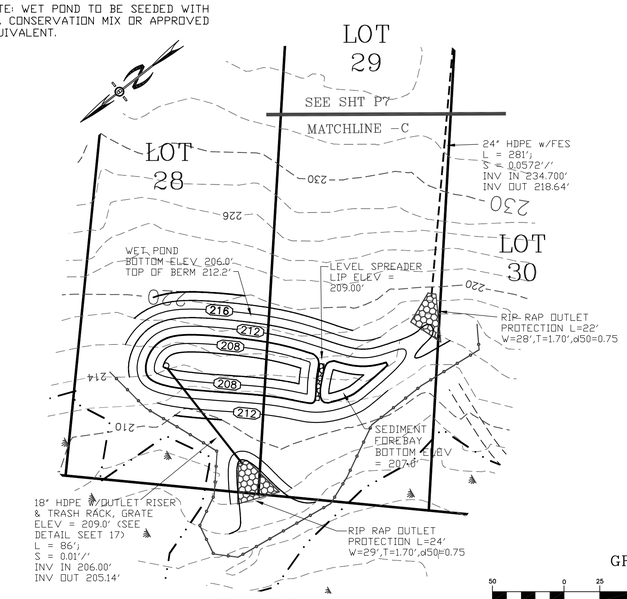

BASIN -C
HYDROCAD POND #4

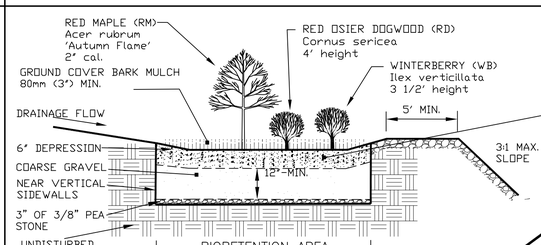

18" FILTER MEDIA; MIXTURE 20% COMPOST/FINELY SHREDDED BARK OR WOOD MULCH W/<5% PASSING THE #200 SEIVE, 30% LOAMY TOPSOIL, 50% SANDY SOIL (SAND PORTION SHALL BE ASTM C33 FINE AGREGATE)

NOTES: 1. SCARIFY SIDES AND BOTTOM OF BIORETENTION AREA TO FACILITATE NATURAL INFILTRATION RATES.
2. PLANTINGS SHOWN ARE SCHEMATIC ONLY, REFER TO LANDSCAPE PLAN FOR ACTUAL PLANTING DETAILS.

BIORETENTION AREA DETAIL
NOT TO SCALE

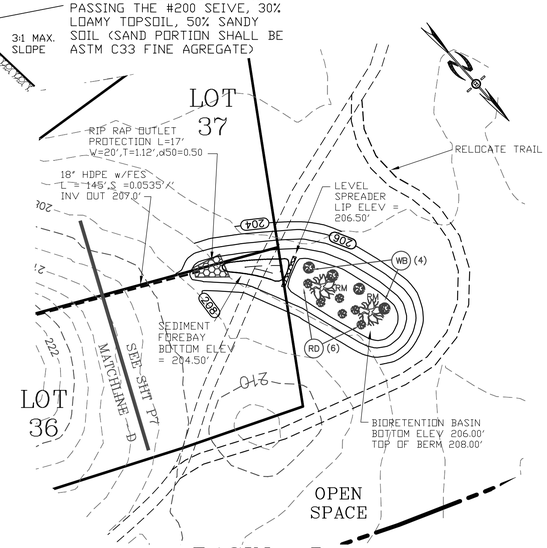

BASIN -D
HYDROCAD POND #6

GRAPHIC SCALE
50 0 25 50 100 200
(IN FEET)
1 inch = 50 ft.

REVISIONS:	DATE:
REVISE PER AoT REVIEW	12-10-12
REVISE PER AoT REVIEW	1-15-13
REVISE BASIN A	5-24-13

DRAINAGE BASIN PLAN - P7

PLAN FOR:
RESIDENTIAL DEVELOPMENT
ROUTE 9
BARRINGTON, NH

DATE: JUNE 2011	SCALE: 1" = 50'
PROJ. N0: NH-634	SHEET NO. 16 OF 20